US009097991B2

(12) **United States Patent**
Sakamoto

(10) **Patent No.: US 9,097,991 B2**
(45) **Date of Patent: Aug. 4, 2015**

(54) **EXPOSURE APPARATUS, METHOD OF CONTROLLING THE SAME AND METHOD OF MANUFACTURING DEVICE**

(71) Applicant: **Canon Kabushiki Kaisha**, Tokyo (JP)

(72) Inventor: **Noritoshi Sakamoto**, Shimotsuga-gun (JP)

(73) Assignee: **CANON KABUSHIKI KAISHA** (JP)

(*) Notice: Subject to any disclaimer, the term of this patent is extended or adjusted under 35 U.S.C. 154(b) by 300 days.

(21) Appl. No.: **13/804,138**

(22) Filed: **Mar. 14, 2013**

(65) **Prior Publication Data**

US 2013/0258308 A1 Oct. 3, 2013

(30) **Foreign Application Priority Data**

Mar. 30, 2012 (JP) 2012-082090

(51) **Int. Cl.**

G01B 11/00	(2006.01)
G03B 27/32	(2006.01)
G03B 27/54	(2006.01)
G03B 27/58	(2006.01)
G03C 9/00	(2006.01)
G03F 5/00	(2006.01)

(Continued)

(52) **U.S. Cl.**
CPC ***G03F 7/70775*** (2013.01); ***G03F 7/70608*** (2013.01); ***G03F 7/70633*** (2013.01); ***G03F 9/7034*** (2013.01); ***G03F 9/7084*** (2013.01)

(58) **Field of Classification Search**
CPC G03F 7/70483; G03F 7/70608; G03F 7/70616; G03F 7/70633; G03F 7/70641; G03F 7/70775; G03F 9/70; G03F 9/7003; G03F 9/7026; G03F 9/7034; G03F 9/7084; G03F 2009/005
USPC 355/55, 67, 68, 72, 77; 356/399–401, 356/630; 430/22, 30
See application file for complete search history.

(56) **References Cited**

U.S. PATENT DOCUMENTS

4,001,774	A	1/1977	Dawson et al.	
6,376,329	B1 *	4/2002	Sogard et al.	438/401
2002/0025482	A1	2/2002	Imai	

(Continued)

FOREIGN PATENT DOCUMENTS

EP	0833208	A2	4/1998
JP	05-315221	A	11/1993

(Continued)

OTHER PUBLICATIONS

Korean Office Action cited in Korean counterpart application No. KR10-2013-0034166, dated Aug. 22, 2014.

(Continued)

Primary Examiner — Colin Kreutzer
(74) *Attorney, Agent, or Firm* — Rossi, Kimms & McDowell LLP

(57) **ABSTRACT**

An exposure apparatus exposes a resist on a substrate to light via an optical system. The exposure apparatus includes: a table configured to position the substrate at an exposure position upon holding the substrate; an obtaining unit configured to obtain a distance from an alignment mark formed on the substrate to a resist surface, and a tilt of the resist surface; and a control unit configured to calculate a correction value for correcting a shift in exposure position, that occurs upon tilt correction of the table, so as to reduce the tilt of the resist surface, using the distance and the tilt, and control a position of the table in accordance with the correction value.

11 Claims, 14 Drawing Sheets

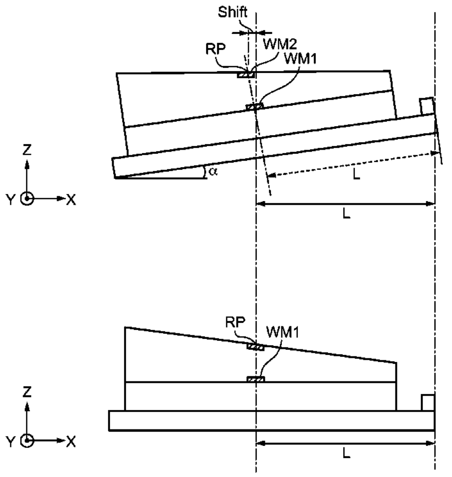

(51) **Int. Cl.**

G03F 7/20	(2006.01)
G03F 9/00	(2006.01)

(56) **References Cited**

U.S. PATENT DOCUMENTS

2002/0109825	A1	8/2002	Gui et al.
2003/0133125	A1	7/2003	Hattori

FOREIGN PATENT DOCUMENTS

JP	06151277	A	5/1994
JP	0766115	A	3/1995
JP	2646417	B2	8/1997
JP	1154423	A	2/1999
JP	2002-280299	A	9/2002
JP	2003-203842	A	7/2003

OTHER PUBLICATIONS

Chinese Office Action cited in Chinese counterpart application CN201310106051.8, dated Oct. 10, 2014. English translation provided.

* cited by examiner

F I G. 1

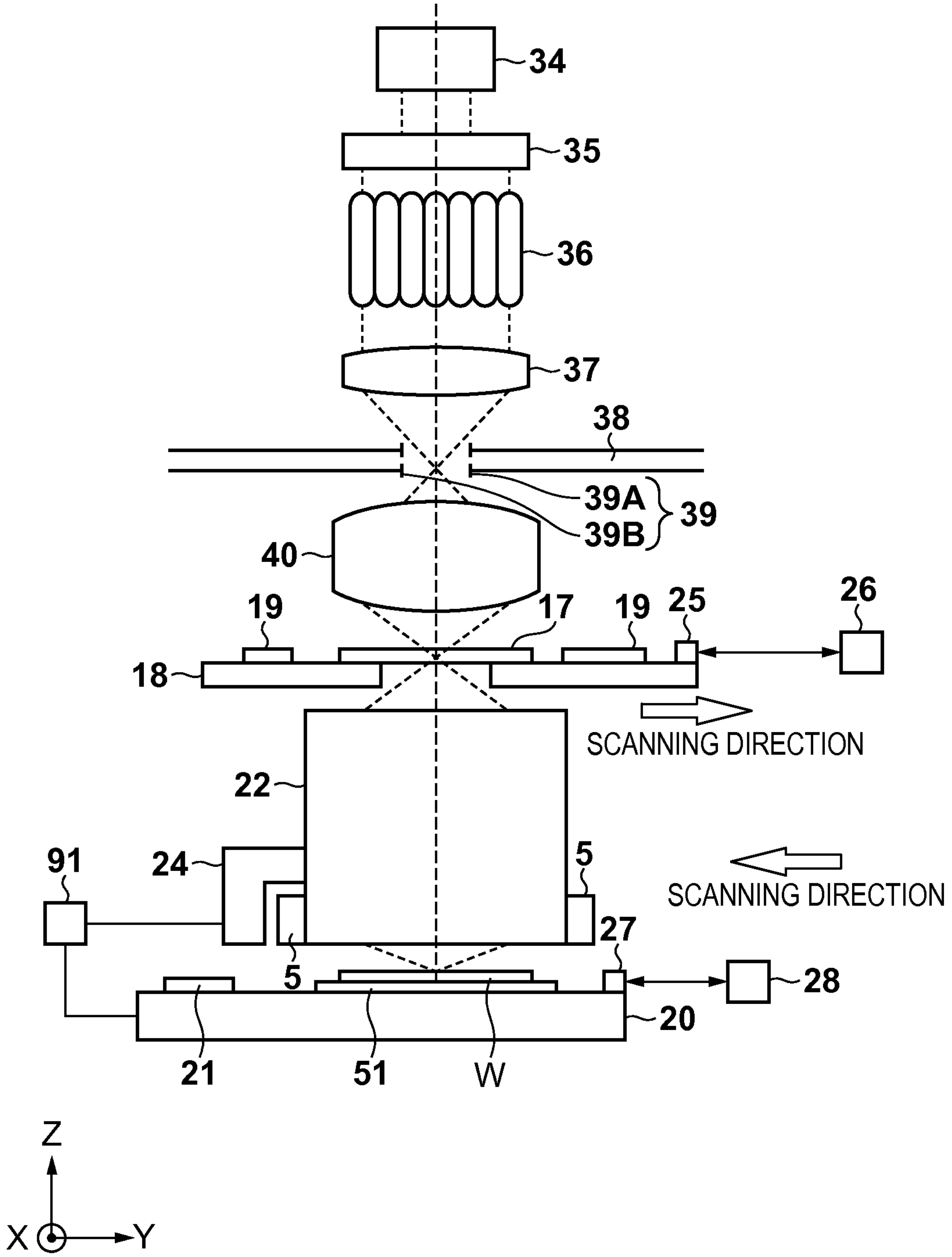
SCANNING DIRECTION
SCANNING DIRECTION
W
Z
X
Y

FIG. 2

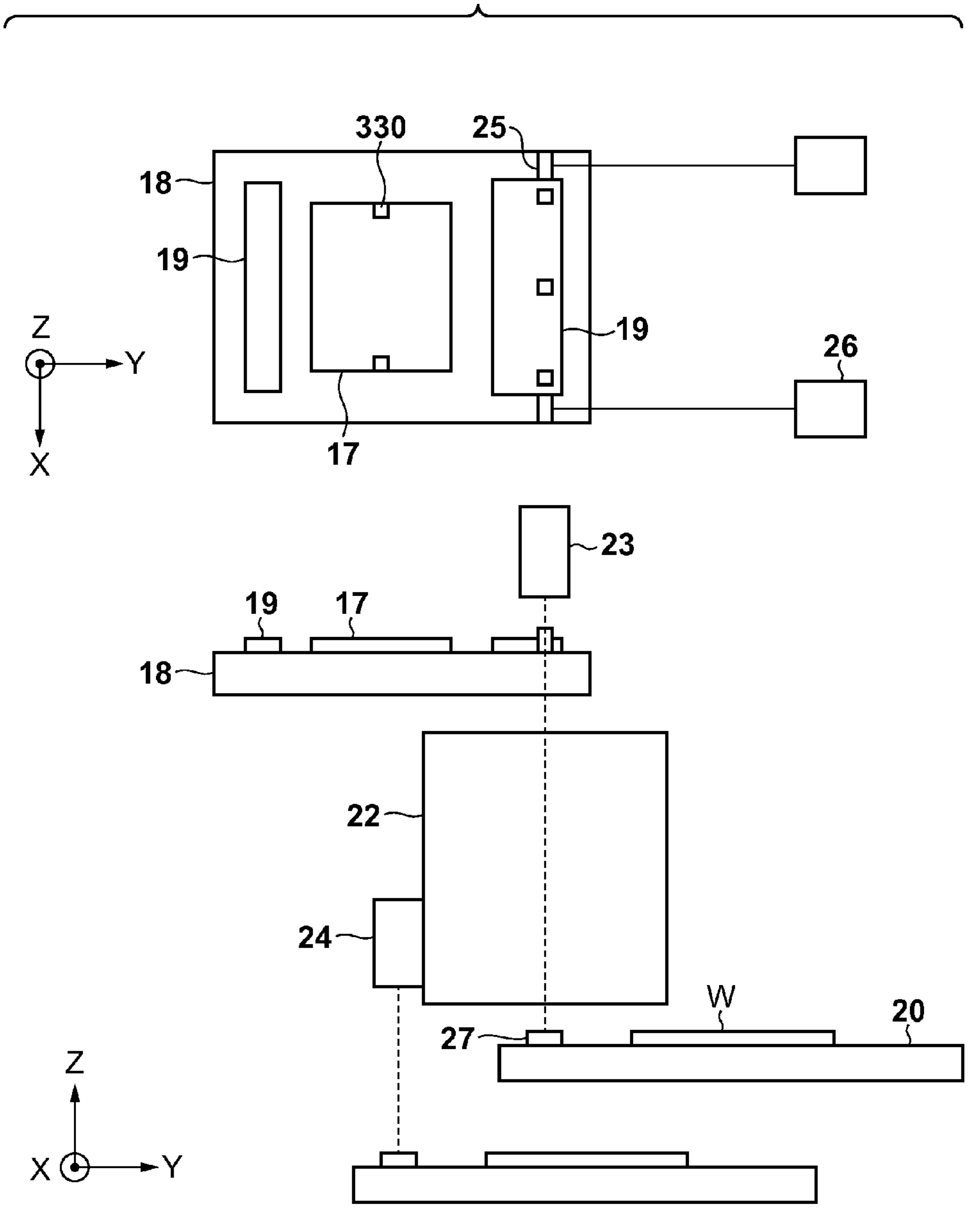
330
25
18
19
Z
Y
X
19
26
17
23
19
17
18
22
24
W
20
27
Z
X
Y

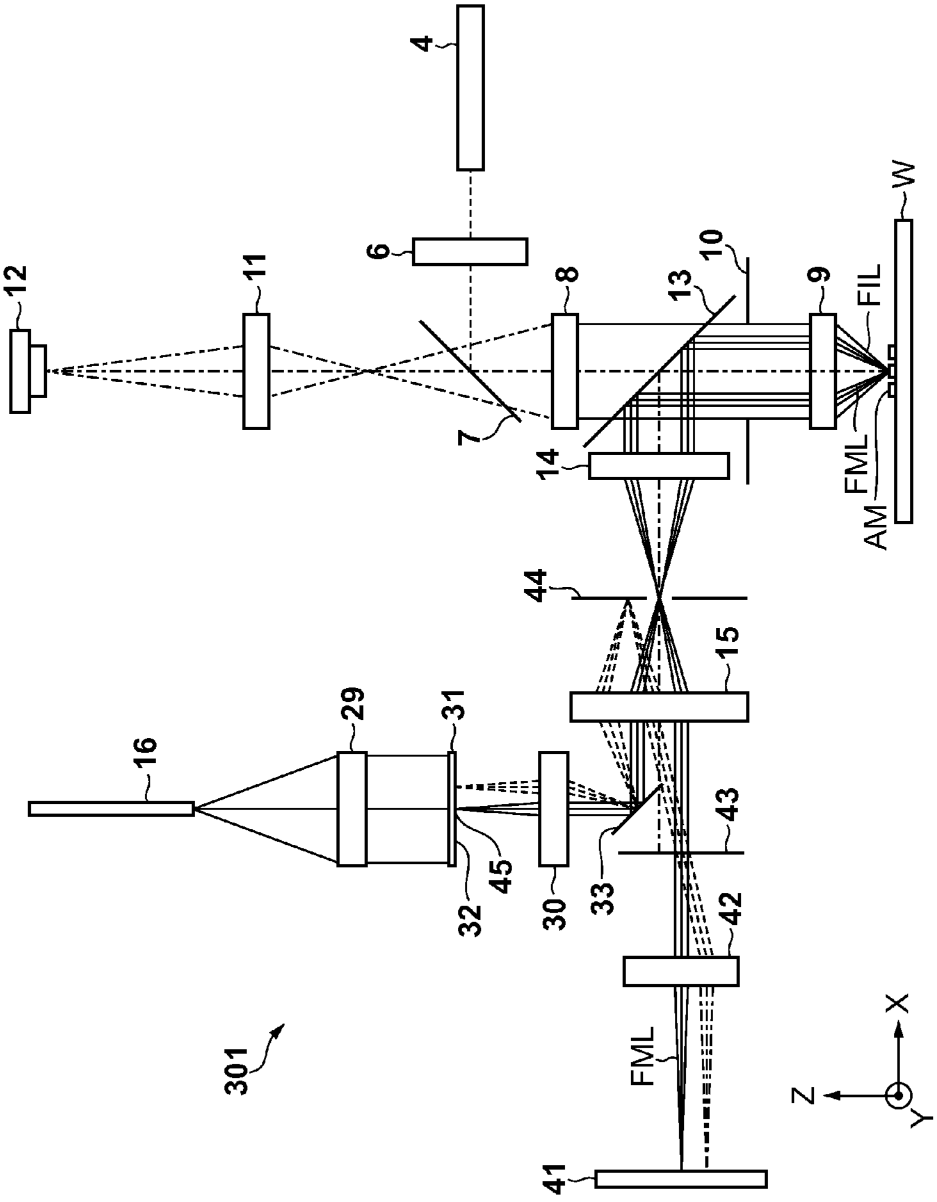
FIL
W
FML
AM
FML
Z
X
Y

FIG. 3

F I G. 4A

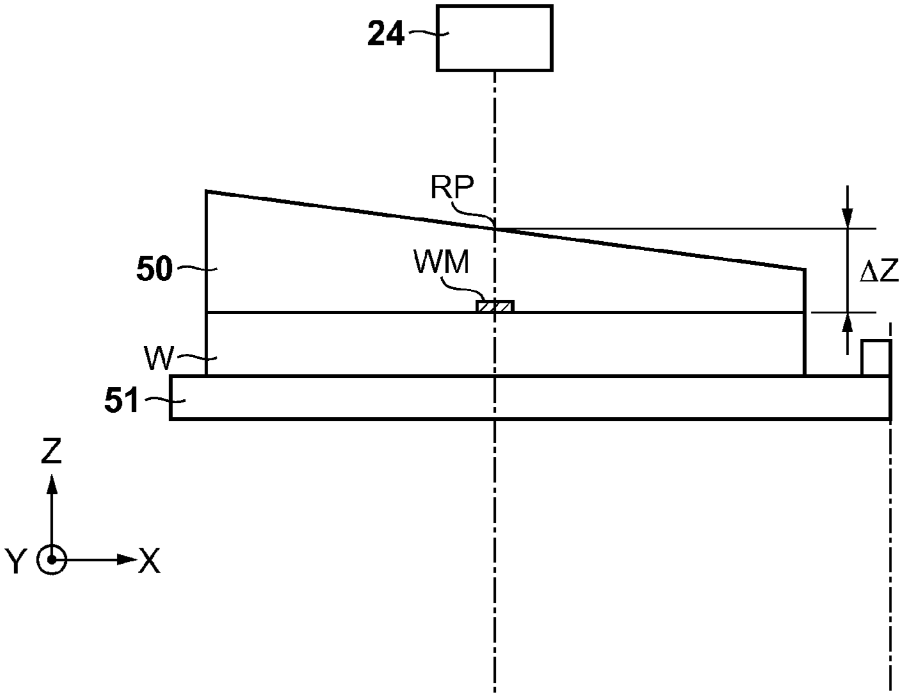
24
RP
50
WM
ΔZ
W
51
Z
Y
X

F I G. 4B

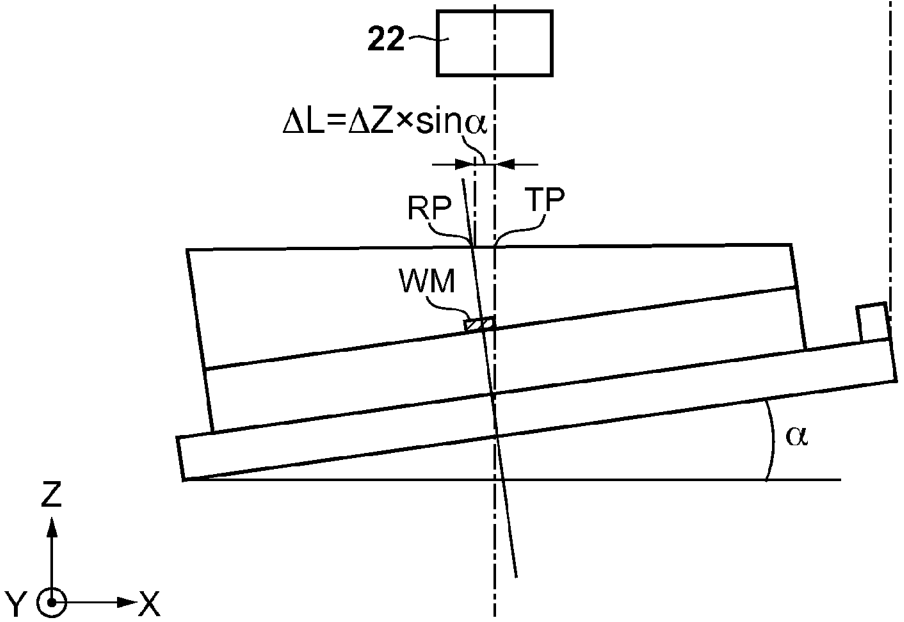
22
ΔL=ΔZ×sinα
RP
TP
WM
α
Z
Y
X

FIG. 5

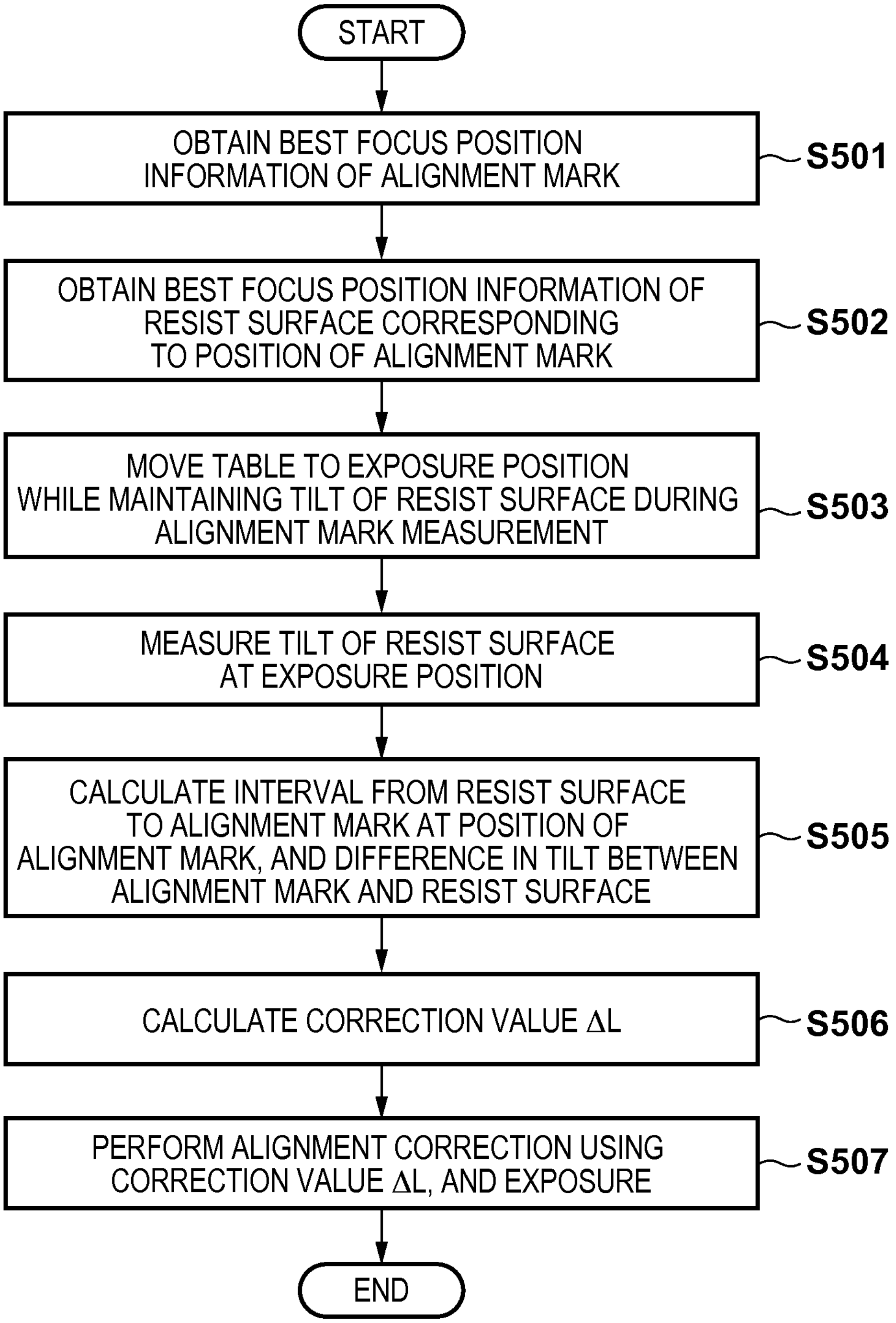
START
OBTAIN BEST FOCUS POSITION INFORMATION OF ALIGNMENT MARK
S501
OBTAIN BEST FOCUS POSITION INFORMATION OF RESIST SURFACE CORRESPONDING TO POSITION OF ALIGNMENT MARK
S502
MOVE TABLE TO EXPOSURE POSITION WHILE MAINTAINING TILT OF RESIST SURFACE DURING ALIGNMENT MARK MEASUREMENT
S503
MEASURE TILT OF RESIST SURFACE AT EXPOSURE POSITION
S504
CALCULATE INTERVAL FROM RESIST SURFACE TO ALIGNMENT MARK AT POSITION OF ALIGNMENT MARK, AND DIFFERENCE IN TILT BETWEEN ALIGNMENT MARK AND RESIST SURFACE
S505
CALCULATE CORRECTION VALUE ΔL
S506
PERFORM ALIGNMENT CORRECTION USING CORRECTION VALUE ΔL, AND EXPOSURE
S507
END

FIG. 6A

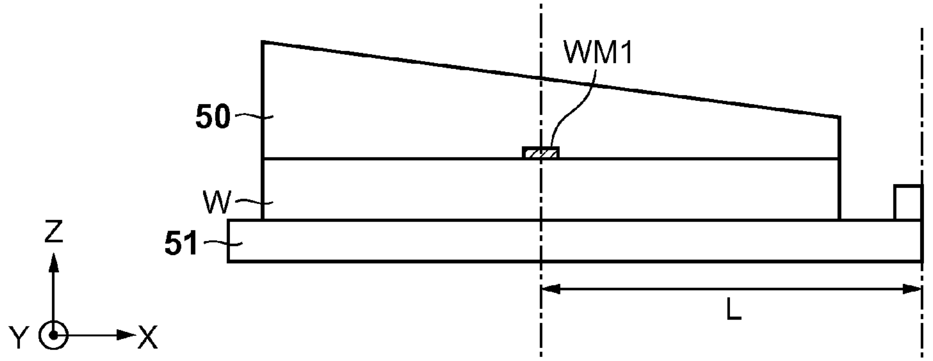
WM1
50
W
51
Z
Y
X
L

FIG. 6B

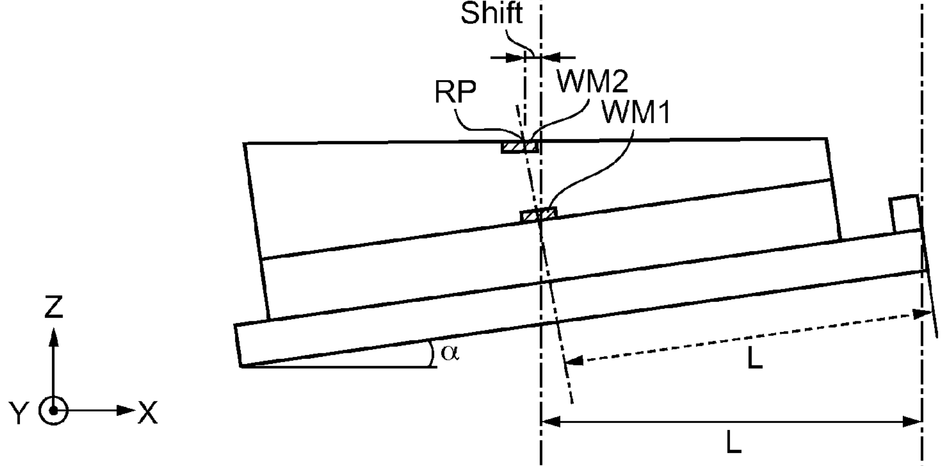
Shift
RP
WM2
WM1
Z
α
Y
X
L
L

FIG. 6C

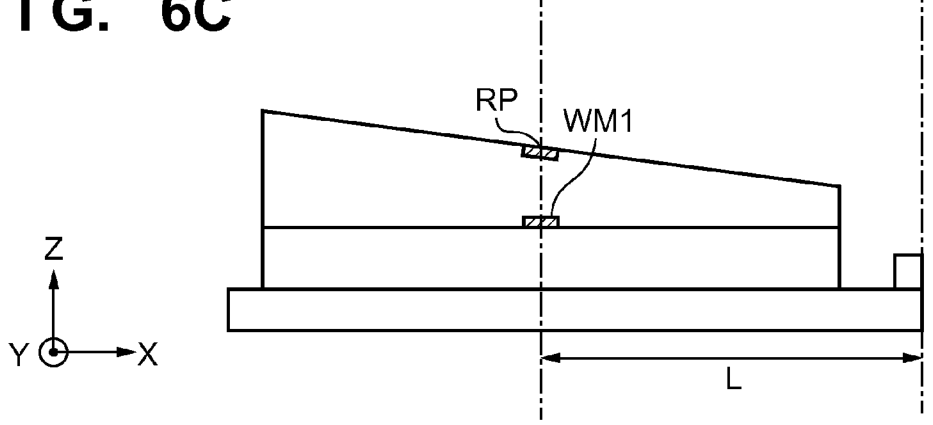

FIG. 7A

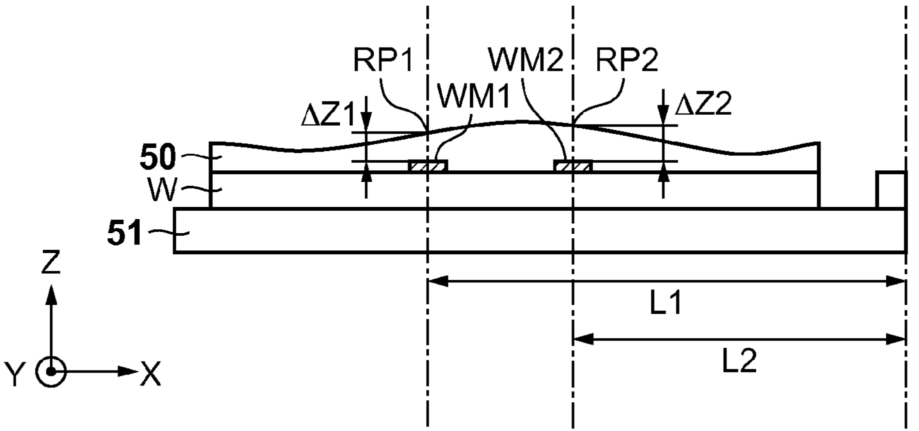
RP1
WM2
RP2
WM1
ΔZ1
ΔZ2
50
W
51
Z
Y
X
L1
L2

FIG. 7B

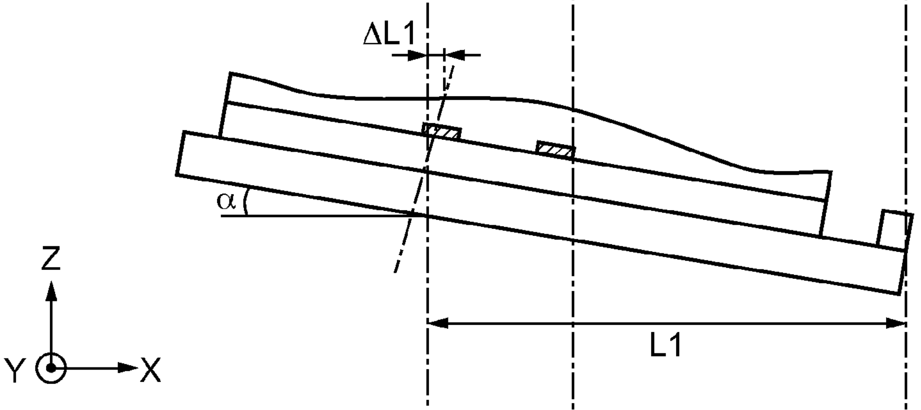

FIG. 7C

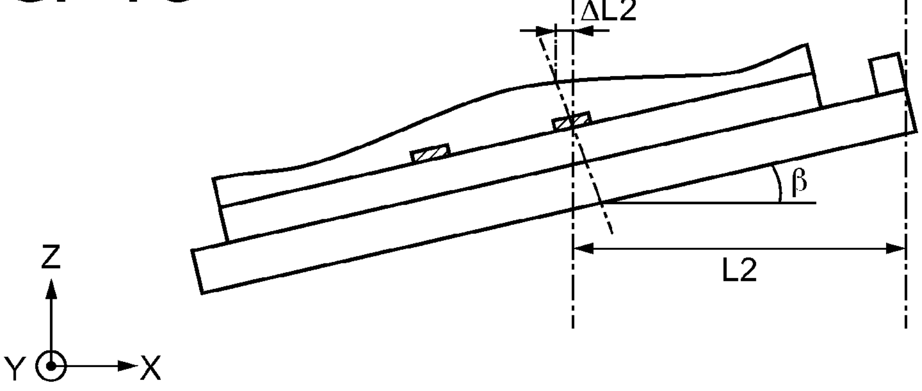

FIG. 8

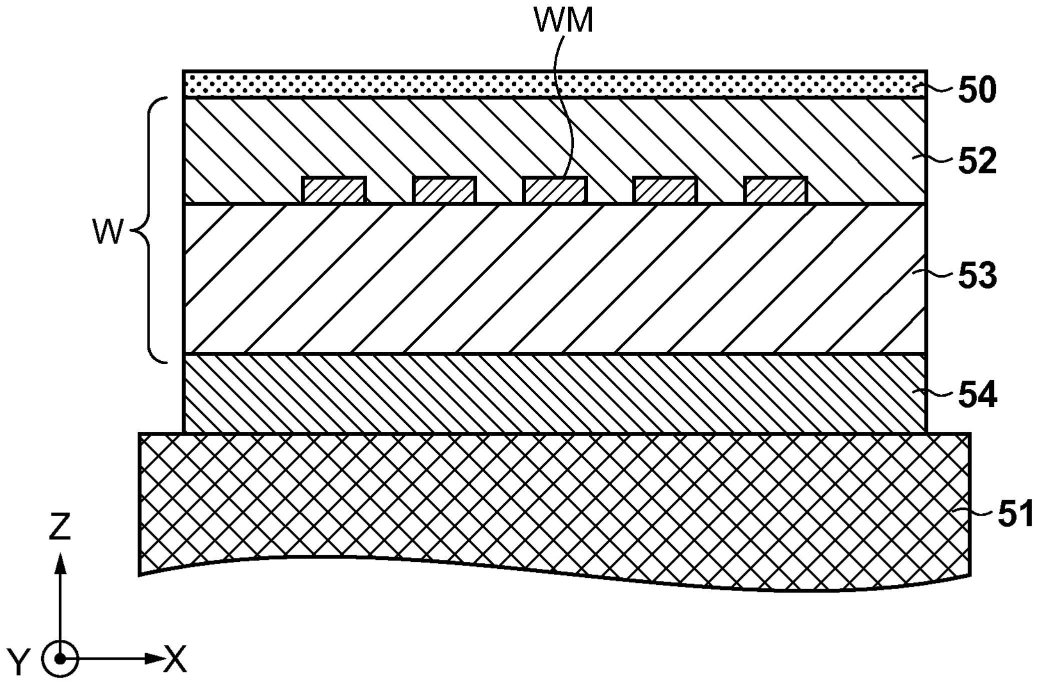
WM
50
52
W
53
54
51
Z
Y
X

FIG. 9A

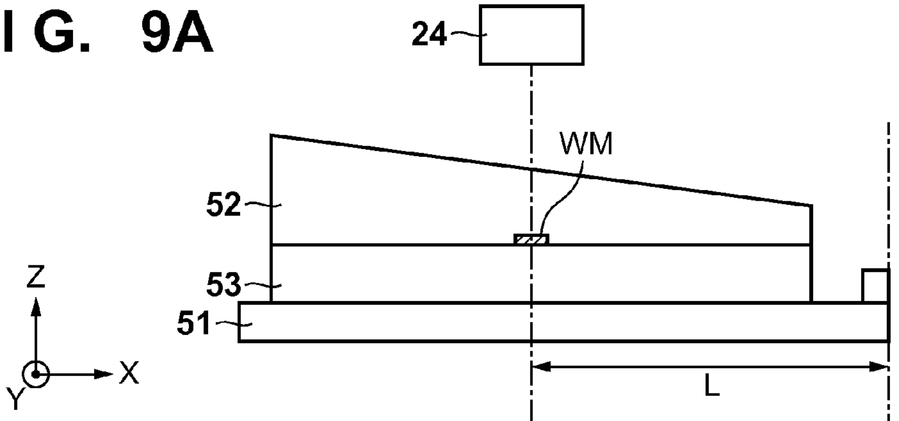
24
WM
52
53
51
Z
X
Y
L

FIG. 9B

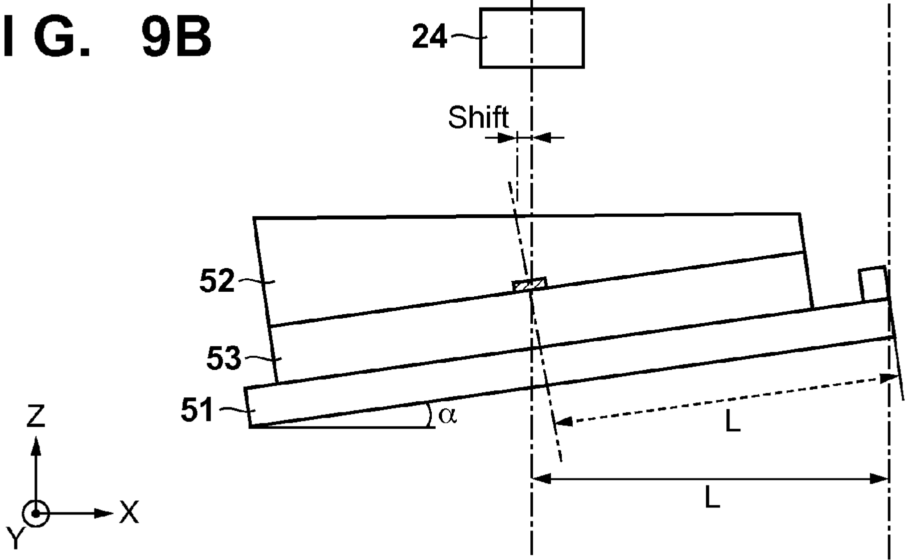
24
Shift
52
53
51
α
Z
X
Y
L
L

FIG. 9C

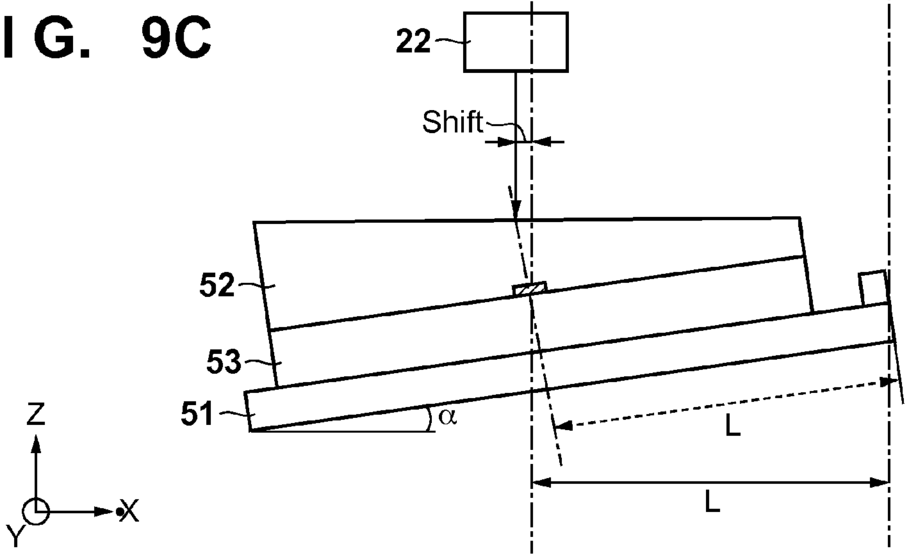
22
Shift
52
53
51
α
Z
X
Y
L
L

FIG. 10

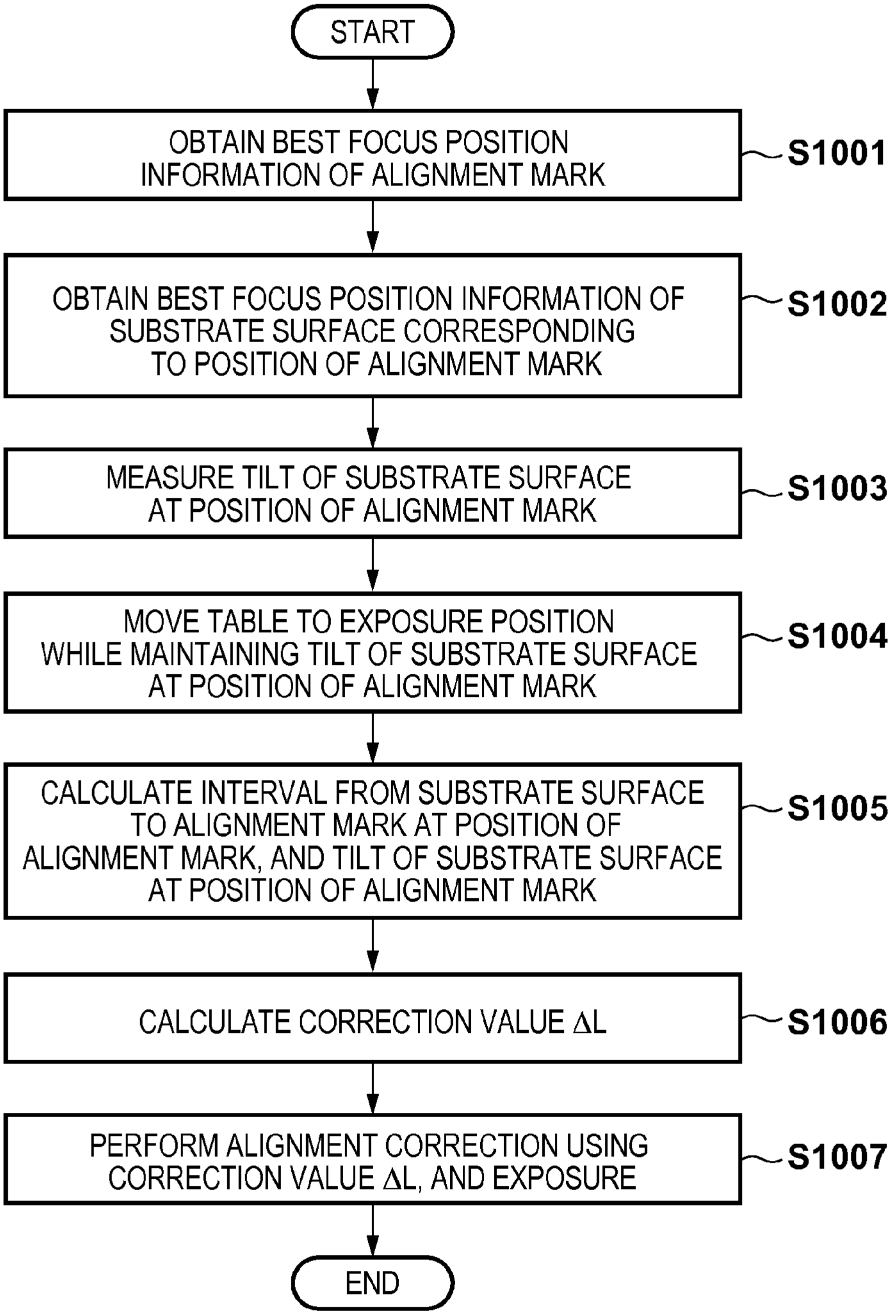
START
OBTAIN BEST FOCUS POSITION INFORMATION OF ALIGNMENT MARK
S1001
OBTAIN BEST FOCUS POSITION INFORMATION OF SUBSTRATE SURFACE CORRESPONDING TO POSITION OF ALIGNMENT MARK
S1002
MEASURE TILT OF SUBSTRATE SURFACE AT POSITION OF ALIGNMENT MARK
S1003
MOVE TABLE TO EXPOSURE POSITION WHILE MAINTAINING TILT OF SUBSTRATE SURFACE AT POSITION OF ALIGNMENT MARK
S1004
CALCULATE INTERVAL FROM SUBSTRATE SURFACE TO ALIGNMENT MARK AT POSITION OF ALIGNMENT MARK, AND TILT OF SUBSTRATE SURFACE AT POSITION OF ALIGNMENT MARK
S1005
CALCULATE CORRECTION VALUE ΔL
S1006
PERFORM ALIGNMENT CORRECTION USING CORRECTION VALUE ΔL, AND EXPOSURE
S1007
END

FIG. 11

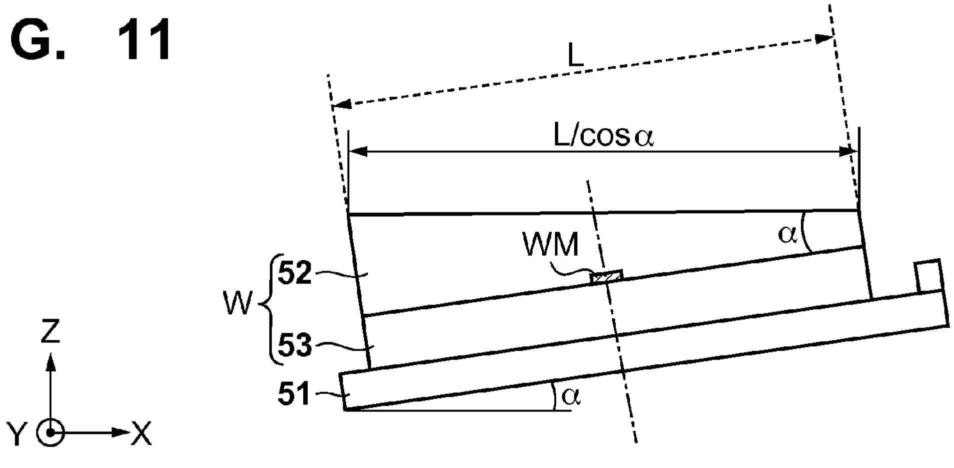
L
L/cosα
α
WM
52
W
53
51
α
Z
Y
X

FIG. 12A

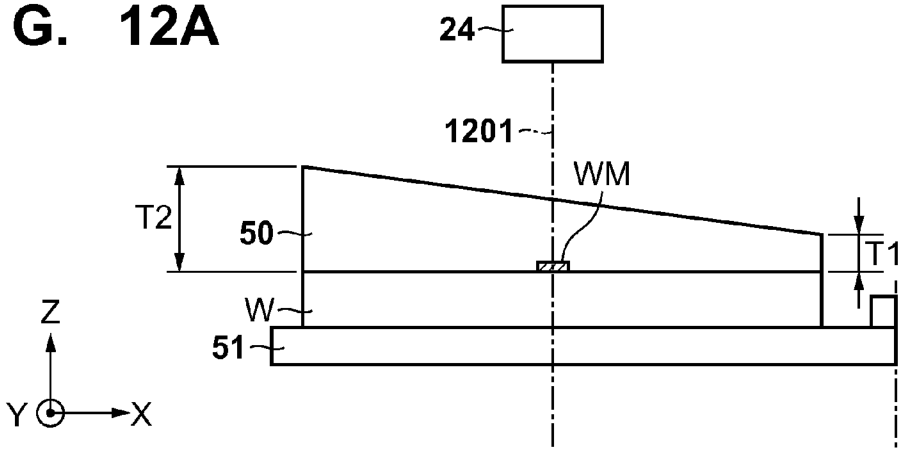
24
1201
WM
T2
50
T1
W
51
Z
Y
X

FIG. 12B

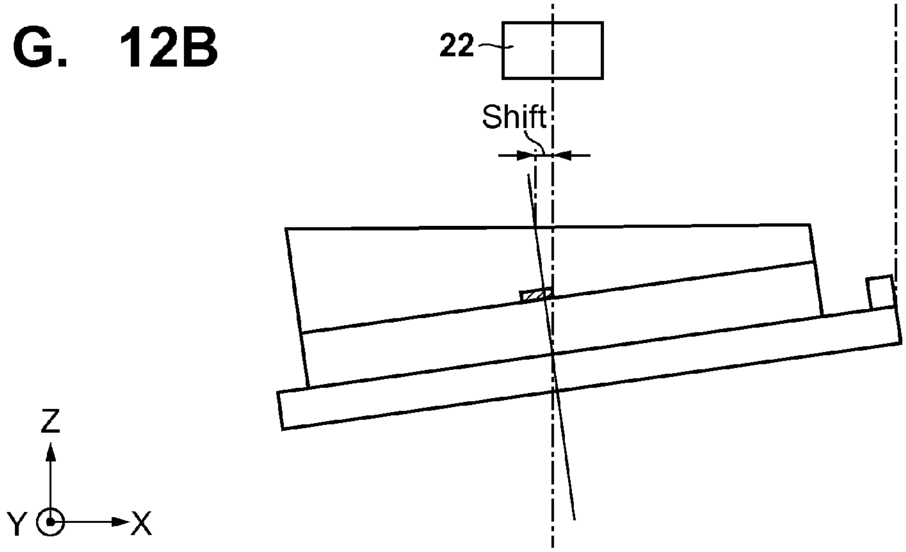
22
Shift
Z
Y
X

F I G. 13A

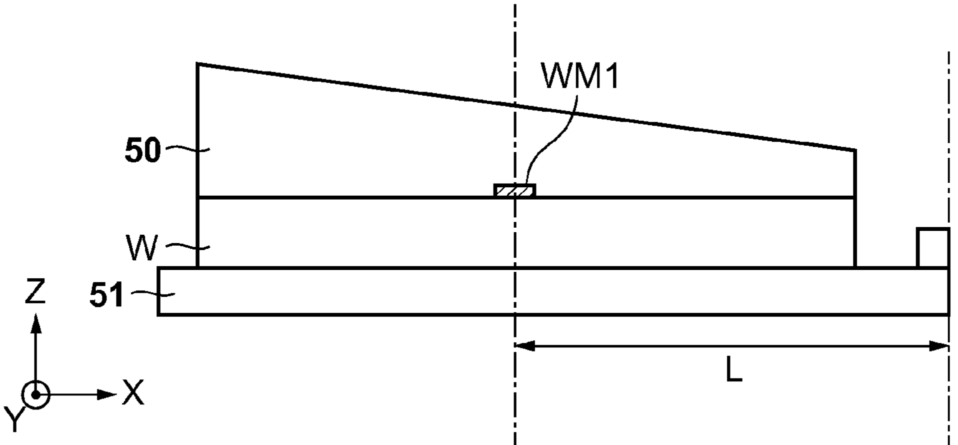
WM1
50
W
51
Z
X
Y
L

F I G. 13B

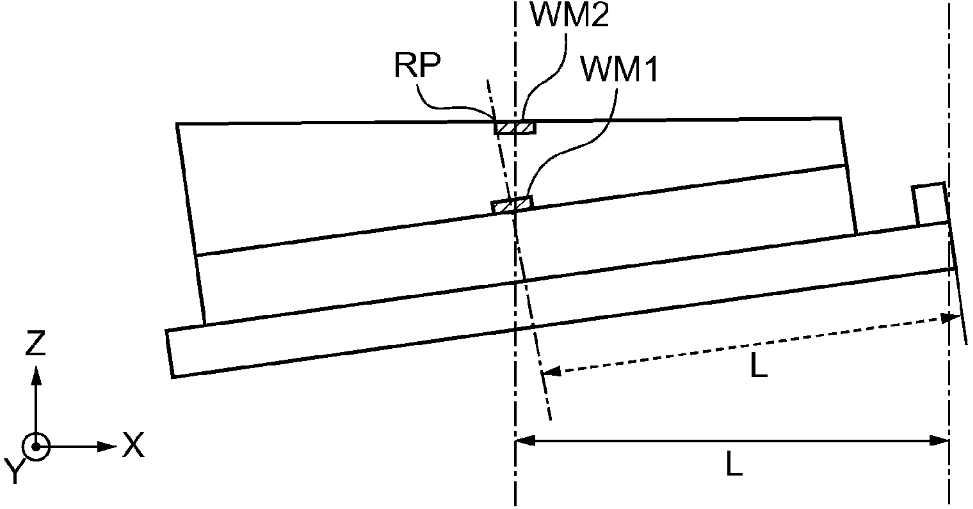
WM2
RP
WM1
Z
X
Y
L
L

F I G. 13C

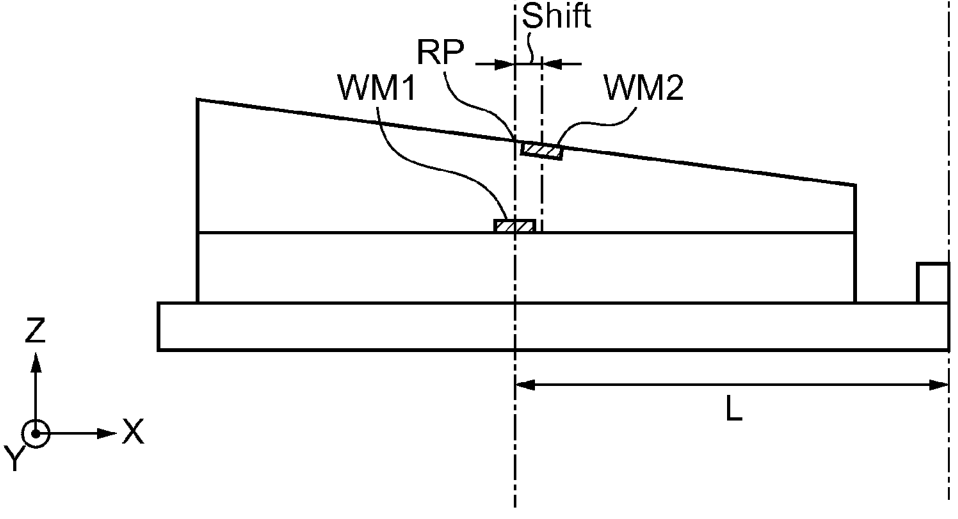
Shift
RP
WM1
WM2
Z
X
Y
L

FIG. 14

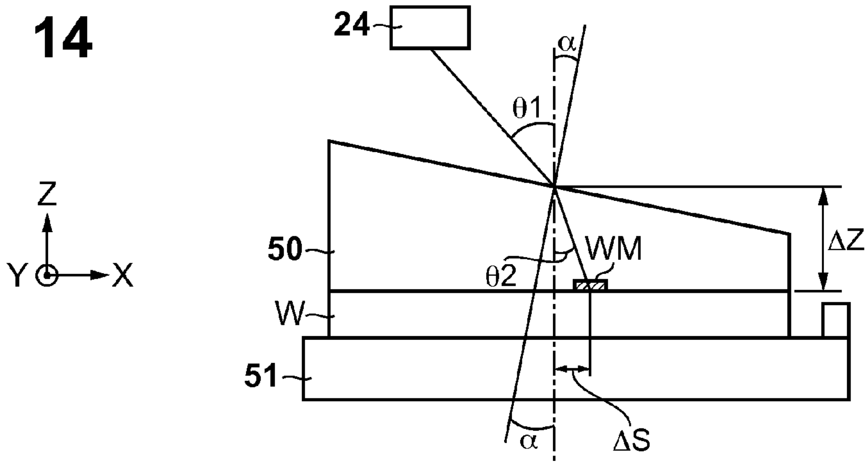
24
α
θ1
ΔZ
50
WM
θ2
W
51
α
ΔS
Z
Y
X

FIG. 15A

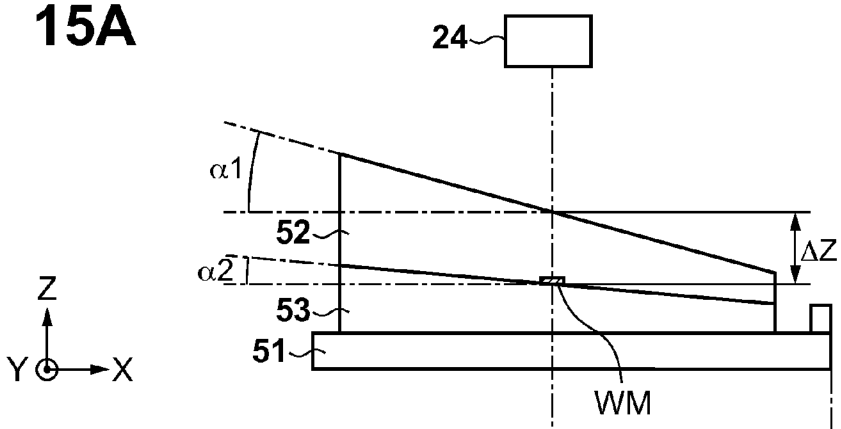
24
α1
52
ΔZ
α2
53
51
WM
Z
Y
X

FIG. 15B

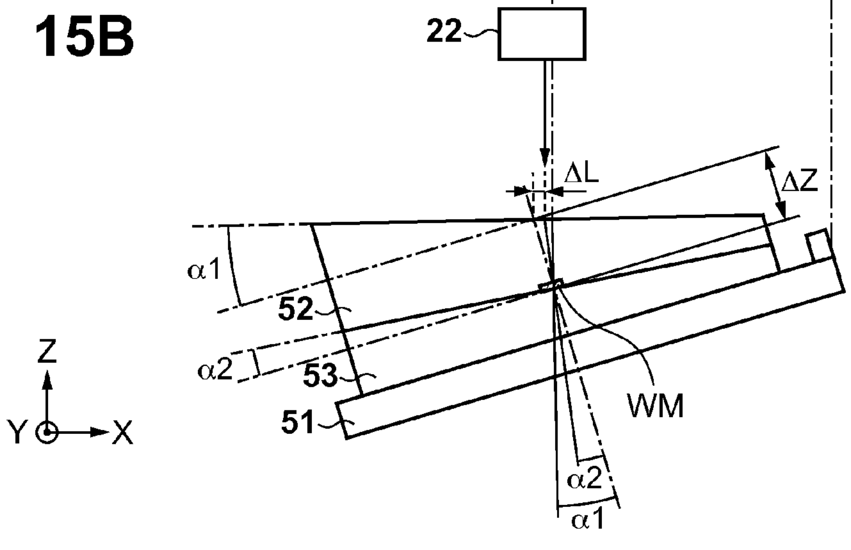
22
ΔL
ΔZ
α1
52
α2
53
51
WM
α2
α1
Z
Y
X

F I G. 16A

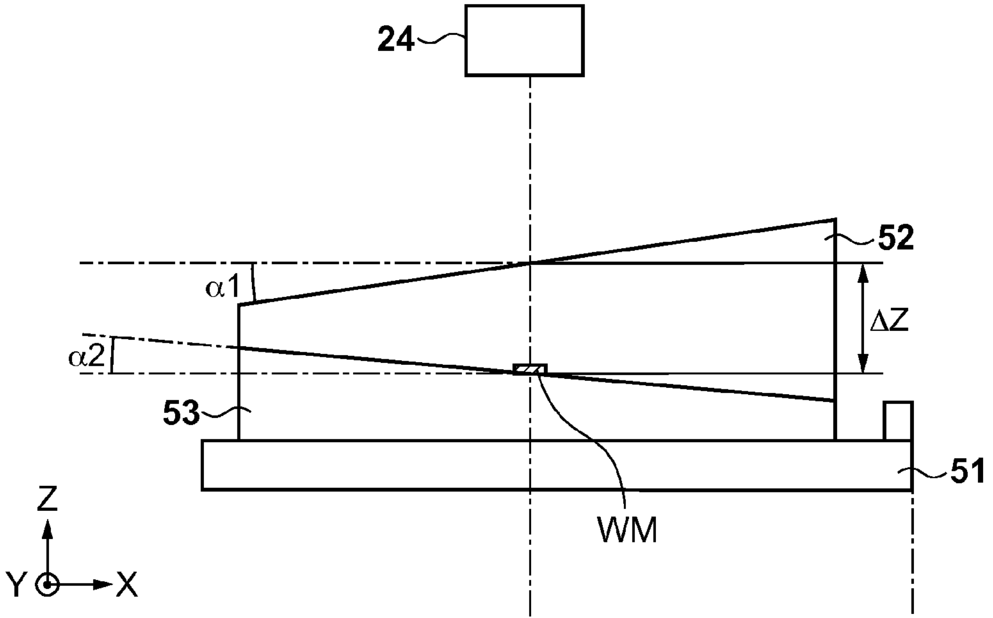
24
52
α1
ΔZ
α2
53
51
WM
Z
Y
X

F I G. 16B

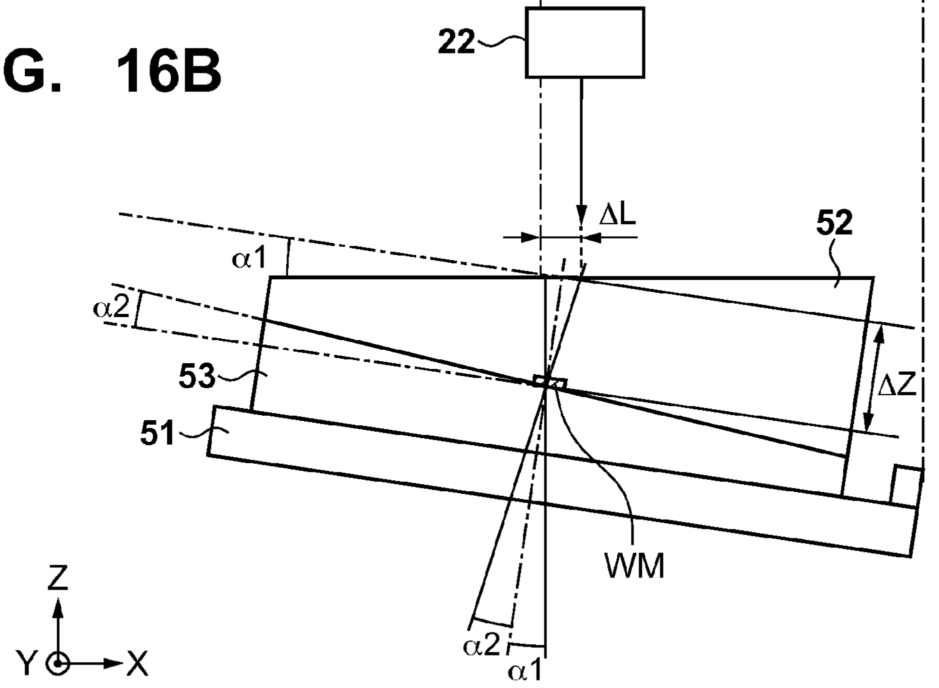
22
ΔL
52
α1
α2
53
ΔZ
51
WM
Z
Y
X
α2
α1

EXPOSURE APPARATUS, METHOD OF CONTROLLING THE SAME AND METHOD OF MANUFACTURING DEVICE

BACKGROUND OF THE INVENTION

1. Field of the Invention

The present invention relates to an exposure apparatus, a method of controlling the same, and a method of manufacturing a device.

2. Description of the Related Art

In recent years, ultrafine patterning techniques as techniques of manufacturing a semiconductor device have been making remarkable progress. In photopatterning techniques in particular, it is usual for a reduction projection exposure apparatus (stepper) having a submicron resolution to be used; so, for example, the numerical aperture (NA) of an optical system is increased, and the exposure wavelength is shortened to further improve the resolution. For example, as the exposure wavelength shortens, exposure light sources are shifting from g- and i-line high-pressure mercury lamps to KrF and ArF excimer lasers. However, as exposure light shifts to short-wavelength light emitted by, for example, a KrF excimer laser, the usable glass material is limited, so it becomes difficult to correct chromatic aberration for the alignment wavelength of a projection exposure optical system. Hence, the recent reduction projection exposure apparatus is required to adopt an off-axis alignment detection system (OA detection system) free from the influence of the chromatic aberration of a projection exposure optical system.

On the other hand, not only conventional IC chips including a memory and logic, but also recent special devices including a MEMS and CMOS are manufactured as applied products using a conventional semiconductor exposure apparatus. However, devices including a MEMS are different from IC chips in several respects. Devices including a MEMS are different from IC chips in that, for example, the former is required to attain a relatively low line width resolution and overlay accuracy but a relatively large depth of focus.

Also, a special exposure process of forming an alignment mark on the lower side of a silicon wafer, and exposing the upper side of the silicon wafer upon alignment with reference to the alignment mark must be done. This process is executed when, for example, a through-hole via is formed to extend from the upper side of a wafer, and used to electrically connect the upper side to a circuit pattern on the lower side. As a method of detecting an alignment mark formed on the lower side of a wafer, Japanese Patent Laid-Open No. 2002-280299, for example, discloses a lithography apparatus which performs alignment using a detection system arranged on the lower side (wafer chuck side). However, in the method of arranging a detection system on the wafer chuck side, only an alignment mark at a position opposite to a specific position of a wafer chuck is an object to be measured. That is, the measurement position is limited, so an alignment mark formed at an arbitrary position on the lower side of the wafer cannot be measured.

To solve this problem, a method of measuring an alignment mark on the upper side of a silicon wafer by an OA detection system including a light source that emits infrared light, using the property that silicon is transparent to infrared light (wavelength: 1,000 nm or more), is available. In lower surface alignment in which silicon has a given thickness from the wafer surface to an alignment mark, variations in tilt of, for example, a wafer table or chuck with respect to the wafer surface may occur due to variations in thickness of the silicon wafer, and variations in overlay accuracy. It has been pointed out that in conventional techniques, the detection accuracy degrades upon a tilt of, for example, the wafer table or chuck.

More specifically, as has been reported conventionally, in a measurement technique such as an interferometer, a shift occurs in position to be exposed, when a wafer is exposed in a tilted state. Japanese Patent Laid-Open No. 5-315221, for example, discloses a method of detecting the tilt of an interferometer mirror, detecting the tilt of a wafer by a tilt measurement device, and calculating the amount of flexure of a table due to its self weight, thereby calculating an Abbe error. With this method, the amount of tilt of the wafer is added to the correction items of the Abbe error to measure the alignment mark with high accuracy. Also, Japanese Patent Laid-Open No. 2003-203842 discloses an arithmetic unit which calculates an error of a plane mirror for each position of a stage, and a method of driving the stage upon correcting the amount of tilt in accordance with the position, to which the stage moves, based on the error obtained by the arithmetic unit in advance.

A shift may occur in position to be exposed, during exposure when the tilt of the wafer surface changes upon lower surface alignment in which silicon has a given thickness from the wafer surface to an alignment mark, or in the interval between the alignment time and the exposure time if a thick resist is used. That is, when tilt correction is performed so as to reduce the tilt of the resist surface in exposure, a shift (shift error) may occur between a position to be ideally exposed and an actually exposed position. To attain exposure with a higher accuracy, a challenge associated with shift error correction is posed, but the conventional literatures describe no shift error correction methods.

FIGS. **12**A and **12**B are views for explaining a shift error that occurs in the interval between the alignment time and the exposure time, in which FIG. **12**A shows an alignment state, and FIG. **12**B shows an exposure state. Referring to FIG. **12**A, an off-axis alignment detection system (OA detection system) **24** detects an alignment mark WM. Referring to FIG. **12**B, a circuit pattern image of a mask (not shown) is transferred onto a wafer W via a projection optical system **22**. The tilt of the wafer surface is different between the alignment state (FIG. **12**A) and the exposure state (FIG. **12**B).

The wafer W is set on a wafer chuck **51**, and the alignment mark WM is formed on the surface of the wafer W, as shown in FIG. **12**A. Also, the surface of the wafer W is coated (dispensed) with a resist **50**. The thickness of the resist **50** on the wafer W is not uniform, but varies along the surface of the wafer W. For example, the thickness of the resist **50** on the right end side of the surface of the wafer W is defined as T**1**, and the thickness of the resist **50** on the left end side of the surface of the wafer W is defined as T**2** (T**2**>T**1**). FIG. **12**A assumes that the surface of the resist **50** has tilted with respect to an optical axis **1201** of a position detection system in wafer alignment (the surface of the resist **50** is not perpendicular to the optical axis of alignment). Although FIG. **12**A shows an exemplary state in which the tilt of the surface of the resist **50** changes linearly, the definition of a shift error is not limited to this example.

On the other hand, FIG. **12**B shows the state in which wafer surface measurement is performed at an exposure position, the tilt of the wafer surface is corrected, and exposure is performed. Upon tilt correction, the surface of the resist **50** becomes perpendicular to the optical axis of the projection optical system **22**. As can be seen from FIG. **12**B, due to the difference in tilt of the wafer surface from the alignment state, the alignment position set during the alignment time shown in

FIG. **12**A shifts during the exposure time shown in FIG. **12**B. A shift between the position in alignment and that in exposure becomes a shift error.

FIGS. **13**A to **13**C are views for explaining the case wherein exposure is performed using a method which does not perform shift error correction. FIG. **13**A shows the state before alignment, FIG. **13**B shows the state in which the tilt of the wafer surface is corrected, alignment is performed, and exposure is performed in this state, and FIG. **13**C shows the state after exposure. An example shown in FIG. **13**A assumes that the surface of the resist **50** has tilted with respect to a wafer surface on which an alignment mark WM**1** is formed as an alignment reference. As shown in FIG. **13**B, even if tilt correction is performed, and alignment is performed so as to match the optical axis of the projection optical system **22** (FIG. **12**B) with the alignment mark WM**1**, an alignment mark WM**2** at an actually exposed position shifts with respect to a position RP to be exposed. That is, a shift error (shift) occurs, as shown in FIG. **13**C. This means that when a surface layer to be exposed has tilted with respect to a layer serving as an alignment reference, in which the alignment mark WM**1** is formed, a shift error occurs even if the tilt of the wafer surface is corrected, as shown in FIG. **13**B.

As a method of solving the above-mentioned problem, a method of preventing a change in tilt of the wafer surface between the alignment measurement time and the exposure time so that a circuit pattern layer in which an alignment mark to be measured becomes parallel to the tilted wafer surface is available. However, when a bond wafer as mainly used in, for example, lower surface alignment is used, it is necessary to adhere a support substrate to a substrate on which a circuit pattern layer is formed, so the flatness of the substrate may degrade.

Also, to polish the substrate so that the circuit pattern layer becomes parallel to the tilted wafer surface, this must be done while measuring the circuit pattern layer and the wafer surface, so the yield may lower due to increases in cost and number of manufacturing steps.

SUMMARY OF THE INVENTION

The present invention has been made in order to solve the above-mentioned problems, and provides a technique which allows high-accuracy exposure by correcting a shift in exposure position, that occurs upon tilt correction of a table, so as to reduce the tilt of a resist surface.

According to one aspect of the present invention, there is provided an exposure apparatus which exposes a resist on a substrate to light via an optical system, the apparatus comprising: a table configured to position the substrate at an exposure position upon holding the substrate; an obtaining unit configured to obtain a distance from an alignment mark formed on the substrate to a resist surface, and a tilt of the resist surface; and a control unit configured to calculate a correction value for correcting a shift in exposure position, that occurs upon tilt correction of the table, so as to reduce the tilt of the resist surface, using the distance and the tilt, and control a position of the table in accordance with the correction value.

According to another aspect of the present invention, there is provided a method of controlling an exposure apparatus which includes a table which positions a substrate at an exposure position upon holding the substrate, and exposes a resist on the substrate to light via an optical system, the method comprising: an obtaining step of obtaining a distance from an alignment mark formed on the substrate to a resist surface, and a tilt of the resist surface; a calculation step of calculating a correction value for correcting a shift in exposure position, that occurs upon tilt correction of the table, so as to reduce the tilt of the resist surface, using the distance and the tilt; and a control step of controlling a position of the table in accordance with the correction value calculated in the calculation step.

According to still another aspect of the present invention, there is provided a method of manufacturing a device, the method comprising steps of: exposing a resist on a substrate to light using an exposure apparatus as defined above; and developing the exposed resist.

According to the present invention, high-accuracy exposure is allowed by correcting a shift in exposure position, that occurs upon tilt correction of a table, so as to reduce the tilt of a resist surface.

Further features of the present invention will become apparent from the following description of exemplary embodiments with reference to the attached drawings.

BRIEF DESCRIPTION OF THE DRAWINGS

FIG. **1** is a view showing the schematic configuration of an exposure apparatus according to the first embodiment;

FIG. **2** is a schematic view showing the vicinity of a mask stage in the exposure apparatus shown in FIG. **1**;

FIG. **3** is a schematic view showing a position detection unit in the exposure apparatus according to the first embodiment;

FIGS. **4**A and **4**B are views for explaining shift correction according to the first embodiment;

FIG. **5** is a flowchart for explaining the sequence of shift correction according to the first embodiment;

FIGS. **6**A, **6**B, and **6**C are views for explaining the state in which exposure is performed upon shift correction according to the first embodiment;

FIGS. **7**A, **7**B, and **7**C are views for explaining shift correction according to the second embodiment;

FIG. **8** is a view for explaining a wafer used in shift correction according to the third embodiment;

FIGS. **9**A, **9**B, and **9**C are views for explaining shift correction according to the third embodiment;

FIG. **10** is a flowchart for explaining the sequence of shift correction according to the third embodiment;

FIG. **11** is a view for explaining magnification correction;

FIGS. **12**A and **12**B are views for explaining a shift error;

FIGS. **13**A, **13**B, and **13**C are views for explaining exposure using a method which does not perform shift error correction;

FIG. **14** is a view for explaining shift correction when the tilt of the optical axis of an alignment detection system is taken into consideration;

FIGS. **15**A and **15**B are views for explaining shift correction according to the fourth embodiment, in which the tilt angle of a surface on which an alignment mark WM is formed is reflected on a correction value; and

FIGS. **16**A and **16**B are views for explaining shift correction according to the fourth embodiment, in which the tilt angle of a surface on which an alignment mark WM is formed is reflected on a correction value.

DESCRIPTION OF THE EMBODIMENTS

Exemplary embodiments of the present invention will be described in detail below with reference to the accompanying drawings. However, constituent components described in these embodiments merely provide examples, so the technical scope of the present invention is determined by the scope of claims and is not limited by the following individual embodiments.

First Embodiment

An exposure apparatus including an off-axis alignment detection system (OA detection system) **24** according to an embodiment of the present invention will be described. FIG. **1** is a view showing the schematic configuration of an exposure apparatus including an OA detection system. A light source **34** emits illumination light in a predetermined wavelength range. The illumination light emitted by the light source **34** enters an illumination optical system which illuminates a mask **17**. The illumination optical system includes an illumination light shaping optical system **35**, fly-eye lens **36**, condenser lens **37**, fixed field stop **38**, variable field stop **39** (variable field stops **39**A and **39**B), and relay lens **40**. The exposure apparatus projects and images the pattern of the mask **17** on a wafer W via a projection optical system **22**. With this operation, a circuit pattern image of the mask **17** within a slit-shaped illumination region is transferred onto the wafer W via the projection optical system **22**.

The light source **34** can be, for example, an excimer laser light source such as an ArF excimer laser or a KrF excimer laser, a metal vapor laser light source, a pulsed light source such as a high-frequency generator which uses a YAG laser, or a continuous light source which uses a mercury lamp and an elliptical reflecting mirror in combination. The wafer W is set on a wafer chuck **51** disposed on a wafer table **20** by a wafer transport device (not shown). The wafer table **20** includes a table which positions the wafer W in the optical axis direction (Z-direction) of the projection optical system **22**, and another table which positions the wafer W within a plane (X-Y plane) perpendicular to the optical axis of the projection optical system **22**. The position of the wafer table **20** is measured by an interferometer **28** and a reflecting mirror **27**.

In exposing the wafer W, it is necessary to align the wafer W relative to the focus position of an image, formed by the projection optical system **22**, in the focus direction. Focus detection units **5** arranged on the projection optical system **22** detect the position of the wafer W in the focus direction.

A slit pattern is projected onto the wafer W from an oblique direction by illumination light via the illumination optical system, mask, and projection optical system. The focus detection units **5** can measure the position of the wafer W in the focus direction based on the position of a slit image which is obtained by a photoelectric conversion element as light which bears the information of the slit pattern projected onto the wafer W is reflected by the surface of the wafer W. The off-axis alignment detection system (OA detection system) **24** is formed above the wafer W.

A baseline measurement method will be described below with reference to FIG. **2**. FIG. **2** is a view showing the schematic configuration of the vicinity of a stage in the exposure apparatus described with reference to FIG. **1**. A mask stage **18** is movable upon holding the mask **17**. The position of the mask stage **18** is measured by an interferometer **26** and a reflecting mirror **25**. The mask **17** is set on the mask stage **18**, and mask reference marks **330** to serve as reference marks for positioning the mask **17** and mask stage **18** are formed on the mask stage **18**. The mask **17** is positioned with reference to the mask reference marks **330**, using a mask alignment microscope (not shown).

The relative position between baseline measurement marks formed on a mask reference plate **19**, and marks on a stage reference plate **21** on the wafer table **20** is detected through the projection optical system **22** using an alignment microscope **23** (first step).

After the first step is completed, the wafer table **20** is moved to move the stage reference plate **21** to the observation region of the OA detection system **24**. The relative position between the marks on the stage reference plate **21**, and the reference marks in the OA detection system **24** is detected (second step).

The amount of a baseline is calculated based on the detection results obtained in the first and second steps. With this operation, the detection position of the OA detection system **24** relative to the exposure drawing center is obtained. By measuring the positions of the marks on the wafer W by the OA detection system **24**, exposure can be started upon positioning the wafer W relative to the drawing center.

The OA detection system **24** (position detection unit) of the exposure apparatus will be described below with reference to the schematic view shown in FIG. **3**. Referring to FIG. **3**, light guided from an illumination light source **4** (for example, a fiber) is guided to a polarizing beam splitter **7** by an illumination optical system **6** to Kohler-illuminate alignment marks AM, formed on the wafer W, via a relay lens **8** and an objective lens **9**.

Light beams reflected, diffracted, and scattered by the alignment marks AM form images of the alignment marks AM on a photoelectric conversion element **12** (for example, a CCD camera) by an imaging optical system **11**. At this time, to detect the alignment marks AM on the wafer W with high accuracy, it is necessary to precisely detect the images of the alignment marks AM. The focus detection units **5** (FIG. **1**) normally arranged on the projection optical system **22** can also be arranged in the OA detection system **24** as a focus detection system (to be referred to as an “AF system” hereinafter) **301** corresponding to the focus detection units **5**. FIG. **3** does not illustrate the focus detection units **5** shown in FIG. **1**.

An illumination lens **29** uniformly illuminates the surface of a slit member **31** with light emitted by an AF illumination light source **16** of the AF system **301**. Light beams FIL (solid lines) having passed through a detection light slit **45** serving as a first aperture portion form slit images on an intermediate imaging plane by an AF illumination optical system **30**, a mirror **33**, and a second relay lens **15**. A partial reflecting member **44** which partially reflects light is set on the intermediate imaging plane. The light beams having passed through the detection light slit **45** are transmitted through the transparent portion of the partial reflecting member **44**, and directly guided to a first relay lens **14**. The light beams are transmitted through the first relay lens **14**, are reflected by a dichroic mirror **13**, and pass through positions decentered on an objective lens pupil plane **10**. Since the light beams having passed through the objective lens **9** are decentered on the pupil plane, they become detection light beams FIL upon oblique incidence on the surface of the wafer W to form an image of the detection light slit **45** on the wafer W. Light beams FML reflected by the wafer W pass through the side of the optical axis, that is opposite to the incident light, on the objective lens pupil plane **10**, are transmitted through the dichroic mirror **13**, first relay lens **14**, and partial reflecting member **44** again, and pass through an aperture stop **43**. The light beams FML having passed through the aperture stop **43** form an image of the detection light slit **45**, formed on the wafer W, on a photoelectric conversion element **41** by an imaging lens **42**. This makes it possible to detect a change in position of the wafer W in the focus direction as a slit position on the photoelectric conversion element **41**.

Note that the illumination light source **4** uses at least one of visible light and infrared light. When alignment marks on the upper surface of the wafer W are measured, a visible-wavelength light source is used. When alignment marks on the lower surface of the wafer W are measured, an infrared-wavelength light source is used. Especially the transmittance of an Si wafer to the wavelength has the characteristic that it increases from a wavelength of about 1,000 nm. Therefore, it is only necessary to use a light source having a wavelength of 1,000 nm or more to allow lower surface detection, and a light source having a wavelength of 1,000 nm or less to allow upper surface observation. To obtain such wavelength characteristics, a method of disposing the illumination light source **4** on the fiber incident side (not shown) or switching the light source itself may be used. Either method can be used as long as a configuration capable of switching between visible light and infrared light, and guiding either of them to the OA detection system **24** is adopted.

A method of measuring the tilt of the wafer surface and the interval from the wafer surface to the alignment marks using the OA detection system **24**, and reflecting the measurement results on alignment correction (shift correction) will be described below. FIGS. **4**A and **4**B are views for explaining alignment correction (shift correction) according to the first embodiment. The wafer W is set on the wafer chuck **51** on the wafer table **20**, and an alignment mark WM is formed on the surface of the wafer W, as shown in FIG. **4**A. Also, the surface of the wafer W is coated with a resist **50**. In practice, it is difficult to coat the surface of the wafer W with the resist **50** with a uniform thickness due to factors associated with, for example, the surface shape of the wafer W, the state of the alignment mark WM, and the coated condition of the resist **50**. Hence, in this embodiment, coating unevenness is assumed to have occurred in the resist **50** on the wafer W, as shown in FIG. **4**A, so as to obtain conditions closer to actual conditions. Referring to FIG. **4**A, the position to be ideally exposed on the alignment mark WM on the side below the resist **50** is immediately above the alignment mark WM. Referring again to FIG. **4**A, reference symbol RP denotes a position to be ideally exposed. When tilt correction is performed so as to reduce a tilt a of the resist surface in exposure, a shift (shift error) may occur between the position RP to be ideally exposed and an actually exposed position TP. Correction of this shift will be referred to as shift correction hereinafter.

The sequence of shift correction according to this embodiment will be described with reference to a flowchart shown in FIG. **5**. In step S**501**, the OA detection system **24** (measurement unit) starts to measure the focus position based on an instruction to obtain the difference in focus position relative to the wafer W from a control system **91** (control unit). The OA detection system **24** (measurement unit) uses the alignment mark WM formed on the wafer W as an object to be measured, as shown in FIG. **4**A. At this time, the control system **91** (control unit) finely drives the wafer table **20** in the Z-direction, and the AF system **301** of the OA detection system **24** (measurement unit) performs AF measurement to obtain a state (best focus state) in which the focus is adjusted on the alignment mark WM. The AF system **301** obtains focus position information (best focus position information) while the focus is adjusted on the alignment mark WM.

In step S**502**, the control system **91** (control unit) finely drives the wafer table **20** in the Z-direction. The AF system **301** performs AF measurement to obtain a state (best focus state) in which the focus is adjusted on the resist surface corresponding to the position at which the alignment mark WM is formed. The AF system **301** obtains focus position information (best focus position information) while the focus is adjusted on the resist surface corresponding to the position at which the alignment mark WM is formed.

In step S**503**, the control system **91** (control unit) moves the wafer table **20** to an exposure position while maintaining the tilt of the wafer table (maintaining the tilt of the resist surface on the alignment mark WM). In step S**504**, the OA detection system **24** (measurement unit) measures the tilt of the resist surface at the exposure position.

In step S**505**, the control system **91** (control unit) calculates the distance (interval) from the resist surface RP to the alignment mark WM based on the pieces of focus position information obtained in steps S**501** and S**502**. Also, the control system **91** (control unit) calculates the difference in tilt between the resist surface and the position of the alignment mark WM (the tilt of the resist surface with respect to the position of the alignment mark WM) based on the tilt of the resist surface obtained in step S**504**.

In step S**506**, the control system **91** (control unit) calculates a correction value ΔL from the distance (interval) from the alignment mark WM to the resist surface, and the difference in tilt between the resist surface and the position of the alignment mark WM. A method of calculating the correction value ΔL will be described in more detail later.

In step S**507**, the control system **91** (control unit) drives the wafer table **20** into the X-Y plane to correct a shift in position to be exposed, that may occur upon tilt driving of the wafer table **20**, using the correction value ΔL (shift correction), and performs exposure. The above-mentioned method is a basic shift correction method in tilt driving of the wafer table **20**. Only one alignment mark WM is assumed in this embodiment, but if a plurality of alignment marks are used, it is only necessary to execute steps S**501** and S**502** in correspondence with each alignment mark, and measure the interval from the resist surface to this alignment mark. Especially the tilt of the wafer is assumed to be equivalent to the slope of a linear function in this embodiment, so the tilt of the resist surface can be expressed using a value common to each mark.

A method of calculating the correction value ΔL will be described below. Let ΔZ be the distance (interval) from the resist surface at the position of the alignment mark WM to the alignment mark WM. Let a be the difference in tilt between the position of the alignment mark WM and the surface of the resist **50** at the exposure position (the tilt of the surface of the resist **50** with respect to the position of the alignment mark WM). Then, the control system **91** can calculate the correction value ΔL in accordance with:

$$\Delta L = \Delta Z \times \sin\alpha \tag{1}$$

A shift in position RP to be exposed, that may occur upon tilt driving of the wafer table **20**, can be corrected using the correction value ΔL calculated in accordance with relation (1) (shift correction).

The state in which exposure is performed upon shift correction using the correction value calculated in accordance with relation (1) will be described below with reference to FIGS. **6**A to **6**C. FIG. **6**A shows the alignment state, FIG. **6**B shows the exposure state, and FIG. **6**C shows the state after exposure. In the state shown in FIG. **6**B, based on the correction value calculated in accordance with relation (1), the control system **91** corrects the position of the wafer table **20**, and aligns the position RP to be ideally exposed with the position of the alignment mark WM**2** relative to the alignment mark WM**1**. When exposure is performed after alignment, no shift error (shift) occurs due to the influence of the tilt of the resist surface. As long as the correction value calculated in accordance with relation (1) is obtained, the control system

91 need only drive the wafer table 20 using the correction value to correct the shift error in exposure.

Also, even when the interval from the surface of the resist 50 to the alignment mark WM1 is the same in practice, it is often the case that the optical axis of the OA detection system 24 has tilted, or the measurement value varies depending on the process conditions. These phenomena occur due to factors including an error of the telecentricity of the OA detection system 24, and the refractive index of the resist. For correction with a higher accuracy, these values must also be taken into consideration.

Shift correction which reflects the tilt of the optical axis of the alignment detection system will be described with reference to FIG. 14. FIG. 14 shows the state in which the alignment mark WM is measured while the optical axis of the OA detection system 24 has tilted by a tilt angle θ1 with respect to a normal to the surface of the wafer W. Referring to FIG. 14, a tilt θ2 of the optical axis after incidence on the resist 50, and a shift ΔS of the measurement value satisfy a relation:

$$\Delta S=\Delta Z\times\tan\theta 2 \tag{2}$$

Let N be the refractive index of the resist 50. Then, according to Snell's law, we have:

$$\sin(\theta 1+\alpha)=N\times\sin(\theta 2+\alpha) \tag{3}$$

Note that θ2 in relation (2) can be calculated from relation (3). Hence, when the optical axis of the OA detection system 24 has tilted, the correction value ΔL (relation (1)) in tilt driving of the wafer table 20, and the correction value ΔS (relation (2)) of a shift of the measurement value, that occurs due to the tilt of the OA detection system 24, need only be calculated independently of each other. In calculating the correction value ΔS, the tilt of the surface of the resist 50 with respect to the alignment mark WM is not taken into consideration. Letting a be the tilt of the surface of the resist 50 with respect to the alignment mark WM, and ΔZ be the distance (interval) from the resist surface to the alignment mark WM, the correction value ΔL in tilt driving of the wafer table 20 can be calculated in accordance with relation (1). When the tilt a of the surface of the resist 50 is taken into consideration, ΔL−ΔS need only be reflected in exposure as a correction value.

Note that the correction value ΔL must be obtained while taking into consideration the fact that the characteristic value of a detection signal detected by the OA detection system 24 varies depending on the combination of at least one of the focus position, and the materials of the wafer and the medium between the wafer surface and the alignment mark. When a characteristic value C of the detection signal is taken into consideration, the correction value ΔL in relation (1) can be obtained in accordance with:

$$\Delta L=C\times\Delta Z\times\sin\alpha \tag{4}$$

Although an example in which the resist 50 coated on the wafer W includes only one layer has been described in this embodiment, the material of the medium between the alignment mark WM and the surface of the resist 50 is not limited to a resist of one type (one layer), and may be formed by a plurality of layers made of different materials. In this case, a plurality of layers may be arbitrarily divided or collectively measured to calculate an alignment correction value. Alternatively, the distance (interval) from the resist surface to the alignment mark to be measured under the plurality of layers may be measured for each layer to calculate the correction value ΔL in tilt driving of the wafer table 20.

The thickness of each layer from the alignment mark WM to the resist surface is defined as ΔZk (k is an integer of 1 to n where n is the number of layers), and the tilt of the surface of this layer with respect to the alignment mark WM is defined as αk (k is an integer of 1 to n where n is the number of layers). Also, when a characteristic value (for example, a value indicating a characteristic such as the refractive index of each layer, or the transmittance of light) corresponding to the material of each layer is defined as a coefficient Ck (k is an integer of 1 to n where n is the number of layers), the correction value ΔL can be obtained in accordance with:

$$\Delta L=\sin\alpha_k\times\sum_{k=1}^{n}(C_k\times\Delta Z_k) \tag{5}$$

Note that ΔZ may be a fixed value represented by, for example, the average or a value in the neighborhood of the average in a lot. Also, the thickness of the resist may be measured by a standard process, its rate of change in each individual process or resist may be obtained in advance, and the obtained result may be reflected on relations (4) and (5), according to which the correction value ΔL is calculated, as a correction coefficient.

Second Embodiment

In the first embodiment, the tilt of the resist surface is assumed to be equivalent to the slope of a linear function. However, in the second embodiment, a method of calculating a correction value when the tilt of the resist surface is not equivalent to the slope of a linear function will be described. FIGS. 7A to 7C are views for explaining shift correction according to the second embodiment. A wafer W is set on a wafer chuck 51 on a wafer table 20, and a plurality of alignment marks WM1 and WM2 are formed on the surface of the wafer W, as shown in FIG. 7A. Also, the surface of the wafer W is coated with a resist 50. In this embodiment, the resist 50 is assumed to be relatively thick in the central and peripheral portions of the wafer W so as to obtain conditions closer to actual conditions.

In the first embodiment, the tilt of the resist surface is assumed to be equivalent to the slope of a linear function, as shown in FIG. 4A. In the second embodiment, the tilt of the surface above the alignment mark WM1 and that of the surface above the alignment mark WM2 are assumed to be different from each other, as shown in FIG. 7A. The positions to be ideally exposed relative to the alignment marks WM1 and WM2 are indicated by positions RP1 and RP2 immediately above the alignment marks WM1 and WM2, respectively.

A method of calculating a correction value, and the sequence of a correction process will be described with reference to FIG. 5. Processes in steps S501 and S502 of FIG. 5 are performed for the alignment marks WM1 and WM2, and the distances (intervals) from the positions RP1 and RP2 on the resist surface to the corresponding alignment marks WM1 and WM2 are measured. Let ΔZ1 be the distance (interval) from the position RP1 on the resist surface to the alignment mark WM1, and ΔZ2 be the distance (interval) from the position RP2 on the resist surface to the alignment mark WM2.

A control system 91 moves the wafer table 20 to an exposure position while maintaining the tilt of a wafer table 20 (step S503), and measures the tilt of the resist surface at the exposure position (step S504).

In step S505, the control system 91 calculates the intervals ΔZ1 and ΔZ2 from the positions RP1 and RP2 on the resist surface to the alignment marks **WM1** and **WM2**, based on the pieces of focus position information obtained in steps **S501** and **S502**.

FIG. **7**B shows the case wherein the distance ΔZ**1** is calculated, and FIG. **7**C shows the case wherein the distance ΔZ**2** is calculated. Let L**1** be the distance from the right end portion of the wafer chuck **51** to the alignment mark **WM1**, and L**2** be the distance from the right end portion of the wafer chuck **51** to the alignment mark **WM2**.

The control system **91** also calculates the differences α and β in tilt between the resist surfaces and the positions of the alignment marks at the exposure position (the tilts of the resist surfaces with respect to the positions of the alignment marks **WM1** and **WM2**) based on the tilts of the resist surfaces obtained in step **S504**.

In step **S506**, the control system **91** calculates correction values ΔL**1** and ΔL**2** using relation (1) based on the distances (intervals) from the alignment marks WM to the resist surfaces, and the differences in tilt between the resist surfaces and the positions of the alignment marks at the exposure position.

Upon correcting a shift in exposure position, that may occur upon tilt driving of the wafer table **20**, the control system **91** corrects the position of the wafer table **20** by the correction value ΔL**1** and tilt correction a in a shot corresponding to the position of the alignment mark **WM1**, and performs exposure. The control system **91** corrects the position of the wafer table **20** by the correction value ΔL**2** and tilt correction β in a shot corresponding to the position of the alignment mark **WM2**, and performs exposure. This makes it possible to correct a shift in position to be exposed, that may occur upon tilt driving of the wafer table **20**, in each shot corresponding to the position of each alignment mark.

A global tilt method of correcting the tilt of the wafer W on its entire surface has been described in the first embodiment, while a method of correcting the tilt of the wafer W for each shot has been described in the second embodiment. In the second embodiment, as in the first embodiment, global tilt correction in which the tilt of the wafer W is corrected on its entire surface can be performed. If a plurality of alignment marks are present, a representative alignment mark may be selected from them, and the amount of tilt at the position of the selected alignment mark to serve as a reference may be set as a representative value.

A method of measuring the thickness of the resist from the resist surface to each alignment mark has been described in the first and second embodiments. The scope of the present invention is not limited to this example, and the thickness may be measured at a representative point and used as a representative value as long as a process in which the thickness of the resist is stable is adopted.

An OA detection system **24** can perform global measurement in which the distance from an alignment mark to serve as a reference to the resist surface, and the tilt of the resist surface with respect to the alignment mark are measured as representative values of the entire substrate. Alternatively, the OA detection system **24** performs die-by-die measurement in which the distances from alignment marks formed at different positions within the plane of the substrate to the resist surfaces, and the tilts of the resist surfaces are measured for each shot. The thicknesses of the marks and global tilt/die-by-die tilt measurement can be selected in various modes in accordance with the required accuracy without departing from the scope of the present invention.

Although shift correction in one axial direction has been described in the first and second embodiments, it can similarly be done in other axial directions.

Third Embodiment

In the first and second embodiments, the resist has unevenness in thickness. However, in the third embodiment, the present invention is applied to lower surface alignment in which an alignment mark formed on the lower side of an Si wafer W upon transmission through the wafer W is observed. In this embodiment, the wafer W is formed by at least one layer. The wafer W includes at least one of a layer formed by a silicon substrate, and a layer formed by a glass substrate. FIG. **8** is a view for explaining the wafer W used in shift correction according to the third embodiment, and the wafer W is formed by, for example, an Si wafer **52** (silicon substrate) and a glass wafer **53** (glass substrate). The Si wafer **52** (silicon substrate) and glass wafer **53** (glass substrate) are bonded to each other by, for example, an adhesive or an optical contact. The surface of the Si wafer **52** (silicon substrate) is coated with a resist **50** to be exposed. When the surface of the Si wafer **52**, which is coated with the resist **50**, is set as an upper surface, alignment marks WM are formed on the surface (lower side) of the Si wafer **52**, which is coated with no resist **50**. The alignment marks WM formed on the surface (lower side) of the Si wafer **52** are formed by a material such as a metal. Because the glass wafer **53** is bonded to the lower surface of the Si wafer **52**, the alignment marks WM are confined in the spaces between the Si wafer **52** and the glass wafer **53**. An OA detection system **24** irradiates the thus formed alignment marks with infrared light, and receives the light reflected by these alignment marks to measure their positions.

The wafer W is chucked by a wafer chuck **51** by vacuum suction. It is often the case that infrared light is reflected by the surface of the wafer chuck **51**, and the reflected infrared light becomes noise light that leads to degradation in quality of an alignment mark image. Hence, the wafer chuck **51** has a stacked structure formed by a plurality of layers (a two-layered structure in an example shown in FIG. **8**), and an antireflection film **54** which does not reflect infrared light is formed in the upper surface portion of the wafer chuck **51**, which is in contact with the wafer W. Note that the wafer chuck **51** is provided with a cooling mechanism and temperature sensor to suppress a rise in temperature due to infrared light. The cooling mechanism and temperature sensor can control the temperature of the wafer chuck **51** constant so as to suppress contraction of the wafer W, that may occur due to transmission of heat generated by the wafer chuck **51** to the wafer W. A wafer W including alignment marks formed on the lower side of an Si wafer **52** may have deformed, instead of having a flat bond wafer surface shape due to the bimetal effect between the Si wafer **52** and the glass wafer **53**. Also, a considerable unevenness in thickness may occur even in the Si wafer **52** and glass wafer **53** themselves. A method of measuring, using the OA detection system **24**, the interval from the resist surface of the wafer W to the alignment mark, and the tilt of the resist surface, and reflecting the measurement results on alignment correction will be described in this embodiment.

FIGS. **9**A to **9**C are views for explaining alignment correction (shift correction) according to the third embodiment. The wafer W (Si wafer **52** and glass wafer **53**) described with reference to FIG. **8** is set on the wafer chuck **51** on a wafer table **20**, as shown in FIG. **9**A. The alignment mark WM is formed on the lower surface of the Si wafer **52**. Also, the surface of the Si wafer **52** is coated with a resist (not shown). In this embodiment, unevenness in thickness is assumed to have occurred in the Si wafer **52**, as shown in FIG. **9**A, so as to obtain conditions closer to actual conditions. Note that in this embodiment, the thickness of the resist is assumed to be sufficiently smaller than that of the Si wafer **52**, and be even.

The sequence of shift correction according to this embodiment will be described below with reference to a flowchart shown in FIG. **10**. In step S**1001**, the OA detection system **24** starts to measure the focus position based on an instruction to obtain the difference in focus position of the wafer W from a control system **91**. The OA detection system **24** uses the alignment mark WM as an object to be measured, as shown in FIG. **9**A. At this time, the control system **91** finely drives a wafer table **20** in the Z-direction, and an AF system **301** of the OA detection system **24** performs AF measurement to obtain a state (best focus state) in which the focus is adjusted on the alignment mark WM. The AF system **301** obtains focus position information (best focus position information) while the focus is adjusted on the alignment mark WM.

In step S**1002**, the control system **91** finely drives the wafer table **20** in the Z-direction. The AF system **301** performs AF measurement to obtain a state (best focus state) in which the focus is adjusted on the surface of the Si wafer **52** corresponding to the position at which the alignment mark WM is formed. The AF system **301** obtains focus position information (best focus position information) while the focus is adjusted on the resist surface corresponding to the position at which the alignment mark WM is formed.

In step S**1003**, the OA detection system **24** measures the tilt of the wafer surface at the position of the alignment mark WM, as shown in FIG. **9**B. In step S**1004**, the control system **91** moves the wafer table **20** to an exposure position while maintaining the tilt of the wafer table **20** (maintaining the tilt of the resist surface on the alignment mark WM).

In step S**1005**, the control system **91** calculates the distance (interval) from the surface of the Si wafer **52** to the alignment mark WM based on the pieces of focus position information obtained in steps S**1001** and S**1002**. Also, the control system **91** calculates the difference in tilt between the wafer surface and the position of the alignment mark WM at the exposure position (the tilt of the wafer surface with respect to the position of the alignment mark WM) based on the tilt of the wafer surface obtained in step S**1003**.

In step S**1006**, the control system **91** calculates a correction value ΔL from the distance (interval) from the alignment mark WM to the wafer surface, and the difference in tilt between the wafer surface and the position of the alignment mark WM at the exposure position, which are calculated in the preceding step S**1005**.

In step S**1007**, the control system **91** drives the wafer table **20** into the X-Y plane, as shown in FIG. **9**C. The control system **91** corrects a shift in position to be exposed, that may occur upon tilt driving of the wafer table **20**, using the correction value ΔL (shift correction), and performs exposure.

Note that in this embodiment, the term "wafer" means a combination of a wafer W and a resist, and the term "wafer surface" also means substantially the surface of a resist (not shown) because the thickness of the resist is smaller than that of the wafer W.

Let ΔZ be the distance (interval) from the wafer surface at the position of the alignment mark WM to the alignment mark WM. Let a be the difference in tilt between the position of the alignment mark WM and the wafer surface at the exposure position (the tilt of the wafer surface with respect to the position of the alignment mark WM). Then, the control system **91** can calculate the correction value ΔL in accordance with relation (1).

A method of correcting a system (for example, a single-stage system) which executes a measurement sequence including wafer alignment, focusing, and tilt measurement, and an exposure sequence in series has been described in this embodiment. However, the present invention is not limited to this, and is also applicable to a system (for example, a twin-stage system) which executes a measurement sequence and an exposure sequence in parallel.

As the first method to be applied to a twin-stage system, the interval from the wafer surface to the alignment mark, for example, is calculated in a measurement sequence. Then, it is only necessary to measure the difference in tilt of the wafer surface between the measurement sequence time and the exposure sequence time, calculate a correction value, and perform correction using it.

As the second method, it is only necessary to measure the interval from the wafer surface to the alignment mark, and the tilt of the wafer surface in a measurement sequence, calculate a correction value, and make a shift to an exposure sequence, in which correction is done while the measured tilt is maintained.

In measuring the tilt of the wafer, the tilt of the wafer with respect to the reference mark on the wafer table is measured as a reference for the tilt of the wafer. Then, it is only necessary to adopt a method of measuring the tilt of the reference mark in the exposure sequence, and calculating the tilts of the wafer in the measurement sequence and the exposure sequence.

Also, as in this embodiment, it is desired to perform magnification correction to improve the overlay accuracy of a surface layer to be exposed. FIG. **11** is a view for explaining magnification correction, in which a wafer W formed by an Si wafer **52** and glass wafer **53** is set on the wafer chuck **51** on the wafer table **20**. An alignment mark WM is formed under the Si wafer **52**, as shown in FIG. **8**. Also, the wafer chuck **51** has tilted at an angle α with respect to the horizontal axis (X-axis). Referring to FIG. **11**, the cross-sectional length of the Si wafer **52** having the alignment mark WM formed on it is defined as L, while that of a surface layer to be exposed is defined as L/cos α. This means that it is only necessary to perform magnification correction of 1/cos α in exposure and perform exposure.

Although focus position information is measured using the OA detection system **24** arranged in the exposure apparatus in the first to third embodiments, the present invention is not limited to this, and a scope in a TTL detection system may be used for measurement in obtaining a best focus position of the alignment mark. Also, a method of measuring the wafer surface is not limited to measurement which uses a focus/position detection system in the exposure apparatus, and the wafer surface may be measured in advance in the exterior of the exposure apparatus, and the measurement result may be obtained and reflected on the alignment result. In this case, the control system **91** functions as an obtaining unit which obtains the distance from the alignment mark to the resist surface, and the tilt of the resist surface, which are measured by a position detection system outside the exposure apparatus. At this time, the control system **91** obtains the characteristic value of the material, that forms the resist, from a holding unit which holds it advance. The holding unit may be disposed inside or outside the exposure apparatus.

According to the above-mentioned embodiments, it is possible to correct a shift between a position to be ideally exposed and an actually exposed position to perform exposure upon high-accuracy alignment.

Fourth Embodiment

In the above-mentioned embodiments, the upper surface of the wafer W, on which the alignment mark WM is formed, that is, the upper surface of the glass wafer **53** has not tilted with respect to the surface of the wafer chuck **51**. However, in practice, a surface on which an alignment mark is formed may tilt. Due, for example, to polishing unevenness of the wafer, the upper surface of the wafer W or that of the glass wafer **53** may tilt.

FIGS. **15**A and **15**B are schematic views for explaining the case wherein a surface on which an alignment mark is formed has tilted. Note that the same reference numerals as in the above-mentioned embodiments denote the same constituent components in FIGS. **15**A and **15**B, and a description thereof will not be given. In this embodiment as well, a glass wafer **53** is set (held) on a wafer chuck **51**, as shown in FIGS. **15**A and **15**B. FIG. **15**A shows the state in which the tilt of a resist surface (not shown) is not corrected, while FIG. **15**B shows the state in which the tilt of the resist surface (not shown) is corrected. Also, in this embodiment, the surface (a surface on which an alignment mark WM is formed) of the glass wafer **53** is assumed to have tilted at an angle $\alpha 2$ with respect to the scanning surface (equivalent to the surface of the wafer chuck **51**) of a wafer stage (not shown). The surface of an Si wafer **52** (silicon substrate) is coated with a resist to be exposed. The surface (resist surface) of the Si wafer **52** coated with the resist is assumed to have a tilt angle $\alpha 1$ with respect to the scanning surface (equivalent to the surface of the wafer chuck **51**) of the wafer stage (not shown).

When the method described in any of the above-mentioned embodiments is used, it is necessary to reflect, on the correction value, the tilt angle $\alpha 2$ of the surface on which the alignment mark WM is formed. Note that as a method of reflecting the tilt angle $\alpha 2$ on the correction value, it is only necessary to calculate the terms (α) of the tilt in relations (1), (4), and (5) for calculating a correction value ΔL as a tilt angle difference ($\alpha 1-\alpha 2$). For example, relation (1) for calculating a correction value ΔL need only be rewritten as:

$$\Delta L=\Delta Z\times\sin(\alpha 1-\alpha 2) \tag{6}$$

Although an exemplary case wherein the tilt angles $\alpha 1$ and $\alpha 2$ satisfy a relation $\alpha 1>\alpha 2$ has been described in an example shown in FIGS. **15**A and **15**B, the present invention is not limited to this case, and the tilt angles $\alpha 1$ and $\alpha 2$ may satisfy a relation $\alpha 1<\alpha 2$. FIGS. **16**A and **16**B show the case wherein the tilt angle $\alpha 1$ of the surface (a surface coated with a resist) of the Si wafer **52**, and the tilt angle $\alpha 2$ of a surface on which an alignment mark is formed satisfy a relation $\alpha 1<\alpha 2$ when $\alpha 1$ has a negative value. FIG. **16**A shows the state in which the tilt of a resist surface (not shown) is not corrected, while FIG. **16**B shows the state in which the tilt of the resist surface (not shown) is corrected. For example, relation (1) for calculating a correction value ΔL need only be rewritten as:

$$\begin{aligned}\Delta L &= \Delta Z\times\sin(-\alpha 1-\alpha 2) \\ &= -\Delta Z\times\sin(\alpha 1+\alpha 2)\end{aligned} \tag{7}$$

The sign indicates the correction direction. Although the surface (the surface coated with the resist) of the Si wafer **52**, and the surface (the upper surface of the glass wafer **53**) on which the alignment mark WM is formed have tilted in this embodiment, the present invention is not limited to this configuration. The surface of the wafer chuck **51**, for example, may have tilted. The stage scanning surface and the surface of the wafer chuck **51** may have an angular difference as long as the above-mentioned angles $\alpha 1$ and $\alpha 2$ can be obtained.

Also, the tilt of the surface (the surface coated with the resist) of the Si wafer **52**, and that of the surface (the upper surface of the glass wafer **53**) on which the alignment mark WM is formed can be obtained at the position of the alignment mark WM at three or more points as long as best focus position information of the alignment mark WM is obtained by an OA detection system **24**.

Moreover, although shift correction in the X-Z plane has been exemplified in this embodiment, a correction value can be obtained using the same method in the Y-Z plane as well. Although the case wherein the wafer W is formed by the Si wafer **52** and glass wafer **53** has been exemplified as the case wherein the surface on which the alignment mark WM is formed has tilted, the present invention is also applicable to a configuration as shown in, for example, FIGS. **4**A and **4**B or **6**A to **6**C. In this case, the tilt angle of the surface (the surface of the wafer W) on which the alignment mark is formed need only be defined as a**2**, while that of the surface coated with the resist is defined as $\alpha 1$. The tilt of the surface (resist surface) of the Si wafer **52**, and that of the surface (the upper surface of the glass wafer **53**) on which the alignment mark WM is formed may be measured using the global scheme, or measured using the die-by-die scheme upon selecting a specific region.

The application of the correction methods according to the above-mentioned embodiments is not limited to a semiconductor manufacturing apparatus. These correction methods are applicable not only to an exposure apparatus in a projection optical system, but also to, for example, a mirror reflection liquid crystal exposure apparatus.

Fifth Embodiment

A method of manufacturing a device using the above-mentioned exposure apparatus is suitable for manufacturing devices such as a semiconductor device and a liquid crystal device. This method can include a step of exposing a substrate coated with a photosensitive agent to light using the above-mentioned exposure apparatus, and a step of developing the exposed substrate. This method can also include subsequent known steps (for example, oxidation, film formation, vapor deposition, doping, planarization, etching, resist removal, dicing, bonding, and packaging).

Other Embodiments

Aspects of the present invention can also be realized by a computer of a system or apparatus (or devices such as a CPU or MPU) that reads out and executes a program recorded on a memory device to perform the functions of the above-described embodiment(s), and by a method, the steps of which are performed by a computer of a system or apparatus by, for example, reading out and executing a program recorded on a memory device to perform the functions of the above-described embodiment(s). For this purpose, the program is provided to the computer for example via a network or from a recording medium of various types serving as the memory device (for example, computer-readable medium).

While the present invention has been described with reference to exemplary embodiments, it is to be understood that the invention is not limited to the disclosed exemplary embodiments. The scope of the following claims is to be accorded the broadest interpretation so as to encompass all such modifications and equivalent structures and functions.

This application claims the benefit of Japanese Patent Application No. 2012-082090, filed Mar. 30, 2012, which is hereby incorporated by reference herein in its entirety.

What is claimed is:

1. An exposure apparatus which exposes a resist on a substrate to light via an optical system, the apparatus comprising:

a table configured to position the substrate at an exposure position upon holding the substrate;

an obtaining unit configured to obtain a distance from an alignment mark formed on the substrate to a resist surface at a position of the alignment mark, and a tilt of the resist surface with respect to a predetermined surface; and

a control unit configured to calculate a correction value for correcting a shift in exposure position, that occurs upon tilt driving of said table, using the distance and the tilt, and control a position of said table in accordance with the correction value.

2. The apparatus according to claim **1**, wherein the predetermined surface is a surface of the substrate, on which the alignment mark is formed.

3. The apparatus according to claim **1**, wherein said control unit obtains the correction value ΔL in accordance with:

$$\Delta L = \Delta Z \times \sin \alpha$$

where ΔZ is the distance, and α is the tilt.

4. The apparatus according to claim **1**, wherein when the resist is formed by a plurality of layers made of different materials, said obtaining unit obtains, as the distance, a thickness of each layer from the alignment mark to the resist surface,

said obtaining unit obtains, with respect to the predetermined surface, a tilt of a surface of the each layer, and a characteristic value of a material of the each layer, and

said control unit calculates the correction value by using the thickness of each layer, the tilt of the surface of the each layer, and the characteristic value of a material of the each layer.

5. The apparatus according to claim **1**, wherein when the alignment mark is formed on a lower surface of the substrate, said obtaining unit obtains a thickness of each layer from the alignment mark to the resist surface, a tilt of a surface of the each layer with respect to the predetermined surface, and a characteristic value of a material of the each layer, and

said control unit calculates the correction value by using the thickness of each layer, the tilt of the surface of the each layer, and the characteristic value of a material of the each layer.

6. The apparatus according to claim **5**, wherein the substrate includes at least one of a layer formed by a silicon substrate, and a layer formed by a glass substrate.

7. The apparatus according to claim **4**, wherein said control unit obtains the correction value ΔL in accordance with:

$$\Delta L = \sin\alpha_k \times \sum_{k=1}^{n} (C_k \times \Delta Z_k)$$

where ΔZk is the thickness of the each layer, αk is the tilt of the surface of the each layer, and Ck is a coefficient representing the characteristic value of the material of the each layer (k is an integer of 1 to n, and n is the number of layers).

8. The apparatus according to claim **1**, further comprising:

a measurement unit configured to perform one of global measurement in which a distance from an alignment mark to serve as a reference to the resist surface, and the tilt of the resist surface are measured as representative values of the entire substrate, and die-by-die measurement in which a distance from an alignment mark, formed at a different position within a plane of the substrate, to the resist surface, and the tilt of the resist surface are measured,

wherein said obtaining unit obtains the measurement result obtained by said measurement unit.

9. A method of controlling an exposure apparatus which includes a table which positions a substrate at an exposure position upon holding the substrate, and exposes a resist on the substrate to light via an optical system, the method comprising:

an obtaining step of obtaining a distance from an alignment mark formed on the substrate to a resist surface at a position of the alignment mark, and a tilt of the resist surface with respect to a predetermined surface;

a calculation step of calculating a correction value for correcting a shift in exposure position, that occurs upon tilt driving of the table, using the distance and the tilt; and

a control step of controlling a position of the table in accordance with the correction value calculated in the calculation step.

10. A method of manufacturing a device, the method comprising steps of:

exposing a resist on a substrate to light using an exposure apparatus comprising a table configured to position the substrate at an exposure position upon holding the substrate; an obtaining unit configured to obtain a distance from an alignment mark formed on the substrate to a resist surface at a position of the alignment mark, and a tilt of the resist surface with respect to a predetermined surface; and a control unit configured to calculate a correction value for correcting a shift in exposure position, that occurs upon tilt driving of said table, using the distance and the tilt, and control a position of said table in accordance with the correction value; and

developing the exposed resist.

11. The apparatus according to claim **1**, wherein when the alignment mark is formed on a lower surface of the substrate, said obtaining unit obtains a thickness of each layer from the alignment mark to the resist surface, a tilt of a surface of each layer with respect to the predetermined surface, and

said control unit calculates the correction value by using the thickness of each layer, and the tilt of the surface of each layer.

* * * * *